GRANZOW®

# RS-RQ

## Ø 32 ÷ 100 mm - STRONG Compact Cylinders

centering diameters, interaxes and piston rods complying with ISO 15552

Available ATEX version upon request

CE Ex II 2Gc IIC T5 II 2Dc T100°C

## TECHNICAL CHARACTERISTICS

| | |
|---|---|
| **Ambient temperature** | -20 ÷ 80°C |
| **Fluid** | filtered air, with or without lubrication |
| **Working pressure** | 1,5 ÷ 10 bar |
| **Bores** | Ø 32 - 40 - 50 - 63 - 80 - 100 mm |
| **Cushionings** | adjustable pneumatic on both sides (UNIVER Original standard supplied) |

## CONSTRUCTIVE CHARACTERISTICS

| | |
|---|---|
| **End-caps** | die-cast aluminium |
| **Barrel** | anodized aluminium |
| **Piston** | aluminium |
| **Guide slide** | acetalic resin |
| **Piston rod** | chromium-plated steel, stainless steel upon request |
| **Piston seal** | nitrile rubber (NBR) |
| **Guide bush for piston rod** | acetalic resin |
| **Shock absorber seals** | nitrile rubber (NBR) on both sides |
| **Magnet** | plasto-ferrite (standard supplied) |

## CODIFICATION KEY

| R | S | 2 | 0 | 0 | 0 | 3 | 2 | 0 | 0 | 2 | 5 | | |
|---|---|---|---|---|---|---|---|---|---|---|---|---|---|
| 1 | 2 | 3 | 4 | | | | 5 | | | | | 6 | 7 |

### 1 Series

**RS**
Ø 32÷100 mm - STRONG Compact Cylinders

**RQ**
Ø 32÷63 mm - STRONG Compact Cylinders
Octagonal tube
NON-ROTATING

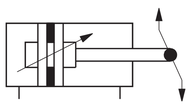

### 2 Type

**RS**
**1** = Stainless steel female piston rod
**2** = Chromium-plated steel female piston rod
**3** = Stainless steel male piston rod
**4** = Chromium-plated steel male piston rod

**RQ**
**1** = Stainless steel female piston rod with flange
**2** = Chromium-plated steel female piston rod with flange

### 3 Version

**Type 1 - 2 RS**
**00** = **D.A.** Standard version
**01** = **D.A.** Through piston rod
**10** = **D.A.** Non-rotating guided piston rod (Ø32÷63)
**11** = **D.A.** Non-rotating guided through piston rod (Ø32÷63)
**20** = **D.A.** Long piston (Ø32÷63)
**60** = **S.A.** Retracted piston rod
**70** = **S.A.** Extended piston rod

**Type 3 - 4 RS**
**00** = **D.A.** Standard version
**01** = **D.A.** Through piston rod
**20** = **D.A.** Long piston (Ø32÷63)
**60** = **S.A.** Retracted piston rod
**70** = **S.A.** Extended piston rod

**Type 1 - 2 RQ**
**00** = **D.A.** Standard version
**01** = **D.A.** Through piston rod
**20** = **D.A.** Long piston
**D.A.** = Double acting
**S.A.** = Single acting

### 4 Bore (mm)

**032** = Ø32
**040** = Ø40
**050** = Ø50
**063** = Ø63
**080** = Ø80 (only **RS**)
**100** = Ø100 (only **RS**)

### 5 Stroke (mm)

**Single acting**
**0005 - 0010 - 0015**
**0020 - 0025**
**Double acting**
**0005 - 0010 - 0015**
**0020 - 0025 - 0030**
**0040 - 0050 - 0060 - 0080**
**Max standard stroke**
**0080** (Ø32÷100)

**Max stroke with long piston (upon request)**
**0800** (Ø32-40) **1000** (Ø50-63)
**Max stroke with non-rotating guided piston rod (upon request)**
**0400** (Ø32-40) **0800** (Ø63)
**0500** (Ø50)

### 6 Option

**C** = With flange for RP series, version: 200-201-260-270 and 100-101-160-170
**H** = Hollow piston rod only for through piston rod versions without flange
**G** = Preset for locking unit only for D.A. cylinders with chromium-plated steel piston rod

### 7 ATEX option

**X** = Atex (upon request)

**See ATEX Catalogue for types and versions**

GRANZOW®

## Stroke tolerances

## Maximum torque **(Nm)** **RQ**

| Ø | mm | Nm |
|---|---|---|
| **32** | + 2-0 | 2 |
| **40** | + 2-0 | 3 |
| **50** | + 2-0 | 5 |
| **63** | + 2,5-0 | 8 |
| **80** | + 4-0 | - |
| **100** | + 4-0 | - |

## Theoretical forces **(N)** at different working pressure **(bar)**

| | Surface area mm² | | Working pressure bar | | | | | Working pressure bar | | | | |
|---|---|---|---|---|---|---|---|---|---|---|---|---|
| | Thrust | Traction | Thrust | | | | | Traction | | | | |
| **Ø** | | | 2 | 4 | 6 | 8 | 10 | 2 | 4 | 6 | 8 | 10 |
| **32** | 804 | 691 | 161 | 322 | 482 | 643 | 804 | 138 | 276 | 414 | 553 | 691 |
| **40** | 1256 | 1056 | 251 | 502 | 754 | 1005 | 1256 | 211 | 422 | 633 | 844 | 1055 |
| **50** | 1962 | 1649 | 393 | 785 | 1178 | 1570 | 1963 | 330 | 660 | 990 | 1320 | 1650 |
| **63** | 3116 | 2802 | 623 | 1246 | 1869 | 2493 | 3116 | 560 | 1120 | 1680 | 2240 | 2800 |
| **80** | 5024 | 4533 | 1005 | 2010 | 3014 | 4019 | 5024 | 907 | 1814 | 2722 | 3629 | 4536 |
| **100** | 7850 | 7359 | 1570 | 3114 | 4710 | 6280 | 7850 | 1472 | 2944 | 4416 | 5588 | 7360 |

Graph of the theoretical thrust forces based on pressure and allawable strokes depending on maximum peak load

## Peak load

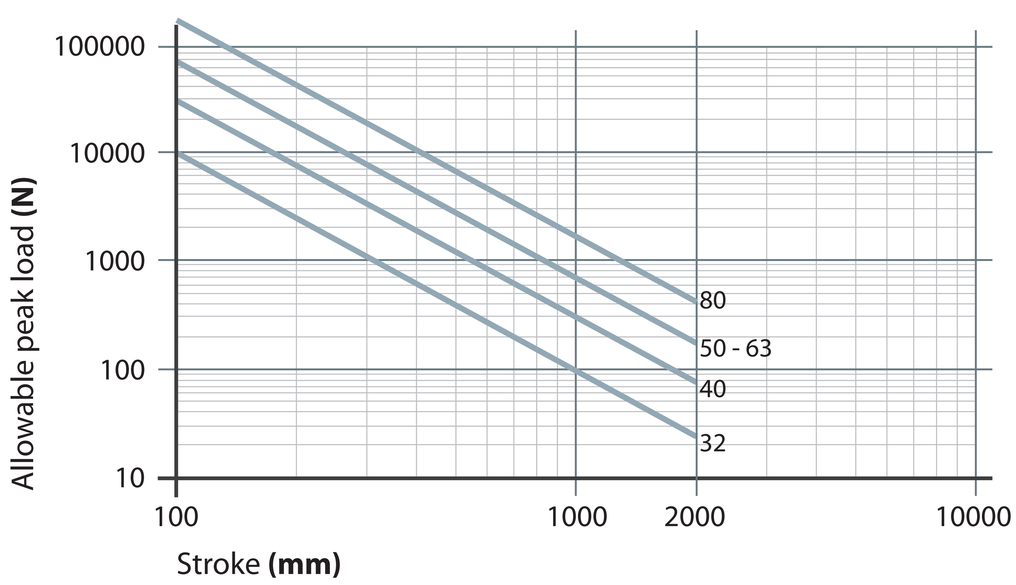


## Theoretical forces of spring traction for single-acting cylinder

| | Max force | Min. force | Max stroke | Decrease per mm stroke |
|---|---|---|---|---|
| **Ø** | N | N | mm | N/mm |
| **32** | 40 | 24 | 25 | 0,64 |
| **40** | 50 | 35 | 25 | 0,6 |
| **50** | 90 | 49 | 25 | 1,64 |
| **63** | 90 | 49 | 25 | 1,64 |
| **80** | 120 | 60 | 25 | 2,4 |
| **100** | 160 | 92,5 | 25 | 2,4 |

## Graph side load on piston rod

**Standard piston** Ø16 ÷ 100 mm

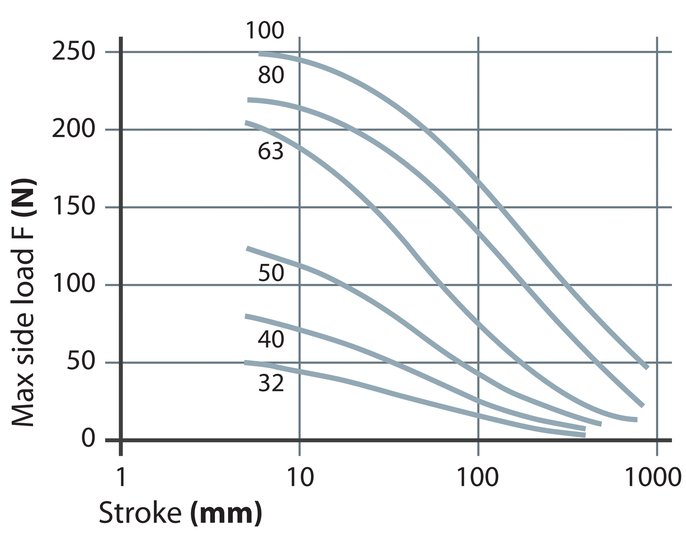


**Extended piston** Ø32 ÷ 100 mm

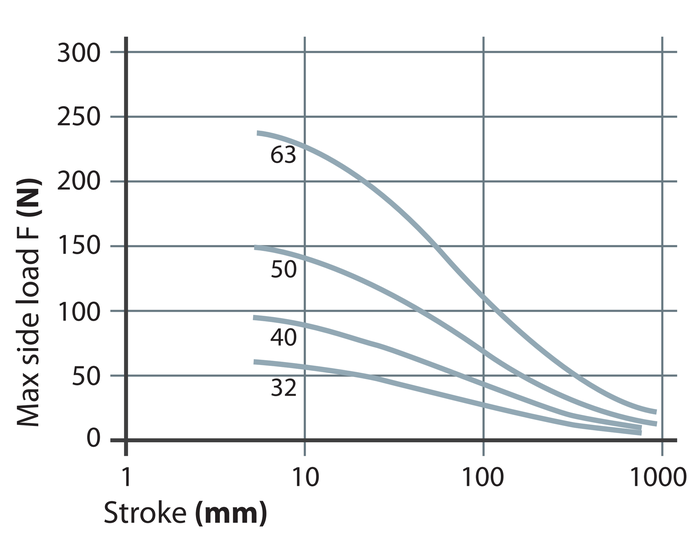


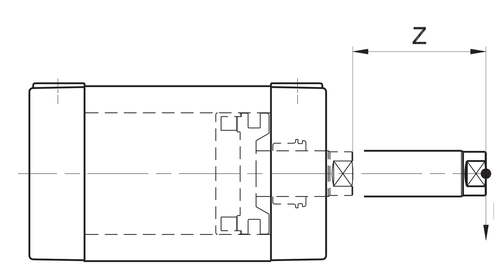


**Z** = Stroke
**F** = Force

GRANZOW®

## Mass - standard cylinder **RS200/RS400**
## Mass - long piston cylinder **RS220/RS420**

| | Cylinder stroke 0 Standard | | Cylinder stroke 0 Long piston | | Increase per mm stroke | Moving element stroke 0 Standard | | Moving element stroke 0 Long piston | | Increase per mm stroke |
|---|---|---|---|---|---|---|---|---|---|---|
| | g | | g | | g | g | | g | | g |
| Ø | RS200 | RS400 | RS220 | RS420 | RS200/220 - RS400/420 | RS200 | RS400 | RS220 | RS420 | RS200/220 - RS400/420 |
| **32** | 215 | 245 | 301,5 | 331,5 | 2,65 | 70 | 100 | 12,5 | 151,5 | 0,9 |
| **40** | 347 | 392 | 482 | 527 | 4 | 110 | 155 | 197 | 242 | 1,6 |
| **50** | 520 | 600 | 769 | 849 | 5,6 | 180 | 260 | 327 | 407 | 2,5 |
| **63** | 800 | 880 | 1151,5 | 1231,5 | 6,55 | 260 | 340 | 485 | 565 | 2,5 |
| **80** | 1204 | 1362 | - | - | 10,5 | 320 | 375 | - | - | 3,9 |
| **100** | 2079 | 2249 | - | - | 12,5 | 445 | 500 | - | - | 3,9 |

## Mass - through piston rod cylinder **RS201/RS401**

| | Cylinder stroke 0 | | Increase per mm stroke | Moving element stroke 0 | | Increase per mm stroke |
|---|---|---|---|---|---|---|
| | g | | g | g | | g |
| Ø | RS201 | RS401 | RS201 - RS401 | RS201 | RS401 | RS201 - RS401 |
| **32** | 245 | 305 | 3,55 | 96 | 156 | 1,8 |
| **40** | 392 | 482 | 5,6 | 151 | 241 | 3,2 |
| **50** | 596 | 756 | 8,1 | 250 | 410 | 5 |
| **63** | 875 | 1035 | 9,05 | 330 | 490 | 5 |
| **80** | 1427 | 1747 | 14,5 | **350** | **430** | **7** |
| **100** | 2450 | 2761 | 16,5 | **405** | **470** | **9** |

## Mass - retracted piston rod cylinder **RS260/RS460**
## Mass - extended piston rod cylinder **RS270/RS470**

| | Cylinder stroke 0 Retracted piston rod | | Cylinder stroke 0 Extended piston rod | | Increase per mm stroke Retracted/Extended piston rod | Moving element - stroke 0 Retracted/Extended piston rod | | Increase per mm stroke Retracted/Extended piston rod |
|---|---|---|---|---|---|---|---|---|
| | g | | g | | g | g | | g |
| Ø | RS260 | RS460 | RS270 | RS470 | RS260/RS460 - RS270/RS470 | RS260/RS270 | RS460/RS470 | RS260/RS460 - RS270/RS470 |
| **32** | 217 | 247 | 213 | 243 | 2,65 | 73 | 103 | 0,9 |
| **40** | 350 | 395 | 344 | 398 | 4 | 116 | 161 | 1,6 |
| **50** | 525 | 605 | 515 | 595 | 5,6 | 192 | 272 | 2,5 |
| **63** | 805 | 885 | 795 | 875 | 6,55 | 272 | 352 | 2,5 |
| **80** | **1105** | **1261** | **1100** | **1102** | 10,5 | **350** | **430** | 3,9 |
| **100** | **2082** | **2128** | **1900** | **2002** | 12,5 | **420** | **480** | 3,9 |

## Mass - non-rotating guided piston rod cylinder **RS210**
## Mass - non-rotating guided through piston rod cylinder **RS211**

| | Cylinder stroke 0 | | Increase per mm stroke | | Moving element stroke 0 | | Increase per mm stroke | |
|---|---|---|---|---|---|---|---|---|
| | g | | g | | g | | g | |
| Ø | RS210 | RS211 | RS210 | RS211 | RS210 | RS211 | RS210 | RS211 |
| **32** | 255 | 285 | 3,09 | 3,99 | 110 | 136 | 1,34 | 2,24 |
| **40** | 414 | 459 | 4,8 | 6,4 | 177 | 218 | 2,4 | 4 |
| **50** | 622 | 698 | 6,4 | 8,9 | 282 | 352 | 3,3 | 5,8 |
| **63** | 952 | 1025 | 7,79 | 10,29 | 412 | 482 | 3,7 | 6,24 |

## Mass - non-rotating guided piston rod cylinder **RQ200** and long piston **RQ220**

| | Cylinder stroke 0 Standard | Cylinder stroke 0 Long piston | Increase per mm stroke | Moving element stroke 0 Standard | Moving element stroke 0 Long piston | Increase per mm stroke |
|---|---|---|---|---|---|---|
| | g | g | g | g | g | g |
| Ø | RQ200 | RQ220 | RQ200/220 | RQ200 | RQ220 | RQ200/220 |
| **32** | 240 | 326,5 | 2,65 | 94 | 146,5 | 0,9 |
| **40** | 386 | 522 | 4 | 148,5 | 237 | 1,6 |
| **50** | 587 | 839 | 5,6 | 247 | 397 | 2,5 |
| **63** | 894 | 1249,5 | 6,55 | 354 | 583 | 2,5 |

## Mass - non rotating guided through piston rod cylinder **RQ201**

| | Cylinder stroke 0 | Increase per mm stroke | Moving element stroke 0 | Increase per mm stroke |
|---|---|---|---|---|
| | g | g | g | g |
| Ø | RQ201 | RQ201 | RQ201 | RQ201 |
| **32** | 270 | 3,55 | 120 | 1,8 |
| **40** | 431 | 5,6 | 189,5 | 3,2 |
| **50** | 663 | 8,1 | 317 | 5 |
| **63** | 969 | 9,05 | 424 | 5 |

GRANZOW®

## RS fixing elements and accessories

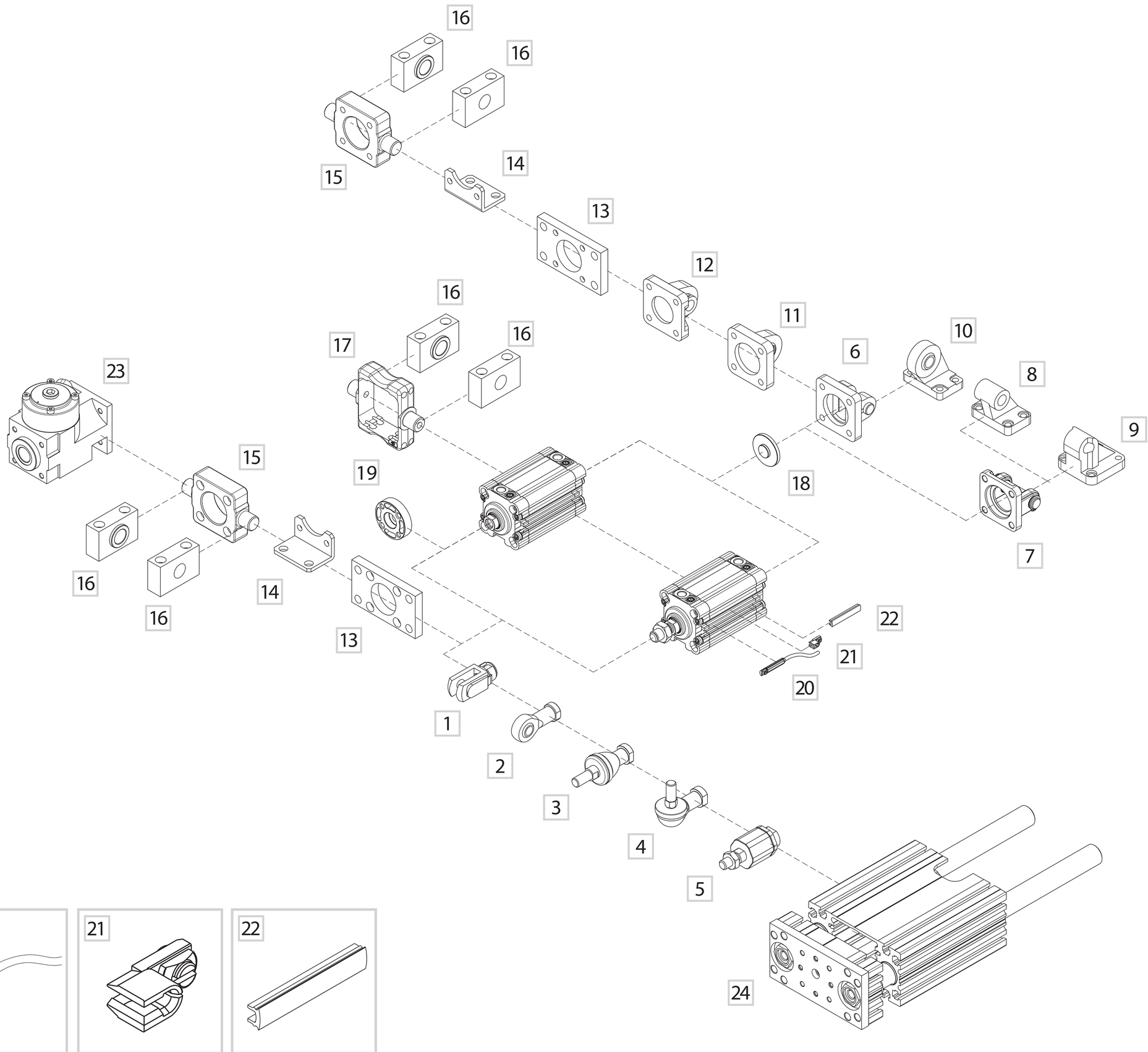


| | DESCRIPTION | PART NO. |
|---|---|---|
| 1 | Female fork with clips | **KF-15_ _ _** |
| 2 | Articulated self-lubricating fork | **KF-17_ _ _** |
| 3 | Fork with axially mounted articulated pin | **KF-22_ _ _** |
| 4 | Fork with angle mounted articulated pin | **KF-23_ _ _** |
| 5 | Floating joint | **KF-24_ _ _** |
| 6 | Female rear hinge with pin | **KF-10_ _ _A** |
| 7 | Narrow female hinge with pin | **KF-10_ _ _AS** |
| 8 | Counter hinge 90° (CETOP) | **KF-19_ _ _CTA** |
| 9 | Counter hinge 90° | **KF-19_ _ _** |
| 10 | Articulated counter hinge | **KF-19_ _ _SC** |
| 11 | Articulated rear male hinge | **KF-11_ _ _S** |
| 12 | Rear male hinge | **KF-11_ _ _** |
| 13 | Front/rear flange | **KF-12_ _ _** |
| 14 | Angle bracket | **KF-13_ _ _** |
| 15 | Front/rear hinge with floating pin | **KF-14_ _ _AP** |
| 16 | Hinge support | **KF-41_ _ _** |
| 17 | ISO intermediate hinge | **KDF-14_ _ _ (Ø32-80-100)/ RPF-14_ _ _** |
| 18 | Centering adaptor ring | **RSF-09_ _ _** |
| 19 | Flange for female piston rod | **RPF-28_ _ _** |
| 20 | DF Sensor (see accessories section) | **DF-_ _ _** |
| 21 | Cable clamping for DF sensor (see accessories section) | **DF-001** |
| 22 | DHF covering strip (see accessories section) | **DHF-0020100** |
| 23 | Locking unit | **L1-N_ _ _** |
| 24 | Slide Units for pneumatic cylinders | **J64RS** |

GRANZOW®

## RQ fixing elements and accessories

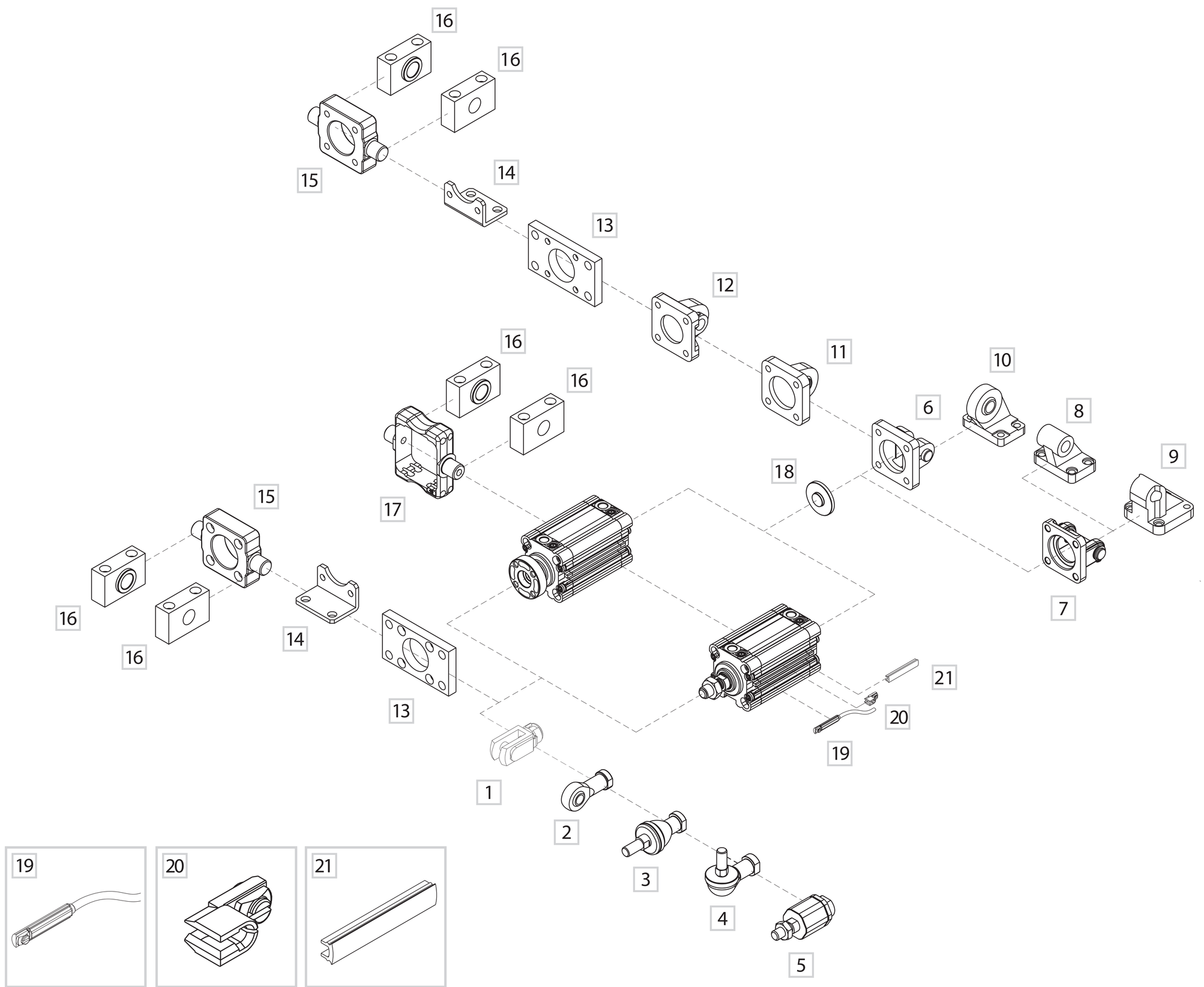


| | DESCRIPTION | PART NO. |
|---|---|---|
| 1 | Female fork with clips | **KF-15_ _ _** |
| 2 | Articulated self-lubricating fork | **KF-17_ _ _** |
| 3 | Fork with axially mounted articulated pin | **KF-22_ _ _** |
| 4 | Fork with angle mounted articulated pin | **KF-23_ _ _** |
| 5 | Floating joint | **KF-24_ _ _** |
| 6 | Female rear hinge with pin | **KF-10_ _ _A** |
| 7 | Narrow female hinge with pin | **KF-10_ _ _AS** |
| 8 | Counter hinge 90° (CETOP) | **KF-19_ _ _CTA** |
| 9 | Counter hinge 90° | **KF-19_ _ _** |
| 10 | Articulated counter hinge | **KF-19_ _ _SC** |
| 11 | Articulated rear male hinge | **KF-11_ _ _S** |
| 12 | Rear male hinge | **KF-11_ _ _** |
| 13 | Front/rear flange | **KF-12_ _ _** |
| 14 | Angle bracket | **KF-13_ _ _** |
| 15 | Front/rear hinge with floating pin | **KF-14_ _ _AP** |
| 16 | Hinge support | **KF-41_ _ _** |
| 17 | ISO intermediate hinge | **KDF-14_ _ _ (Ø32-80-100)/ RPF-14_ _ _** |
| 18 | Centering adaptor ring | **RSF-09_ _ _** |
| 19 | DF Sensor (see accessories section) | **DF-_ _ _** |
| 20 | Cable clamping for DF sensor (see accessories section) | **DF-001** |
| 21 | DHF covering strip (see accessories section) | **DHF-0020100** |

GRANZOW®

## Double acting standard RS Ø 32 ÷ 63

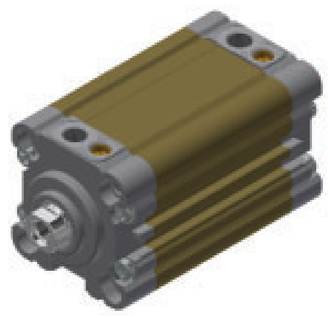

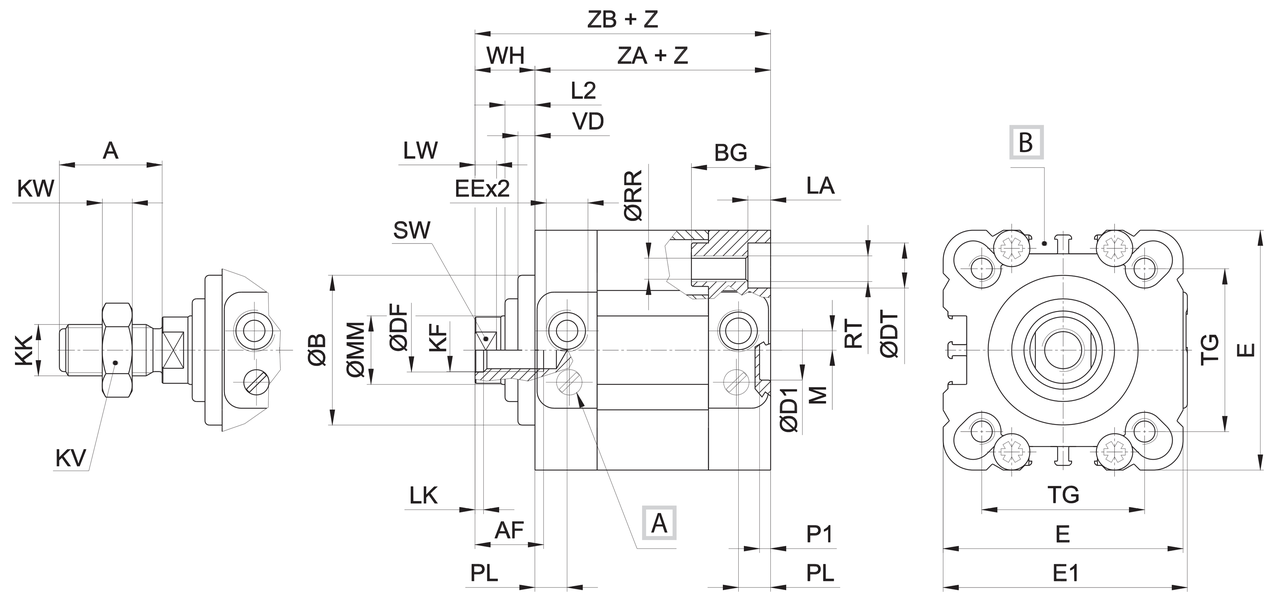


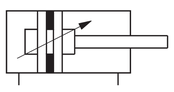

## Double acting standard RS Ø 80 - 100

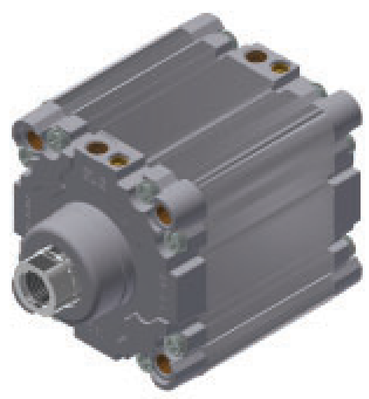

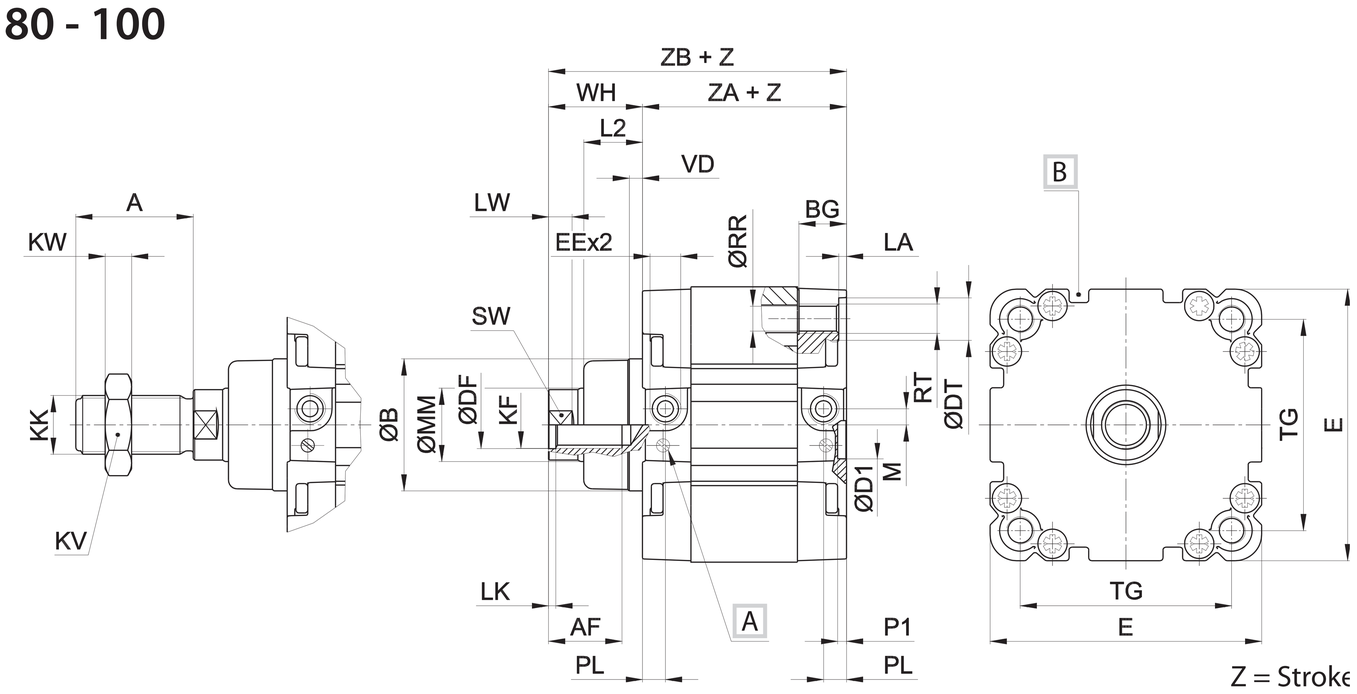


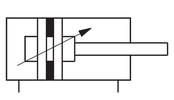

Z = Stroke

| Ø | A | AF | B | BG | DF | DT | D1 | E | EE | E1 | KF | KK | KV | KW | LA |
|---|---|---|---|---|---|---|---|---|---|---|---|---|---|---|---|
| | | | | | | | H11 | | | | | | | | |
| 32 | 22 | 12 | 30 | 18 | 8,2 | 9 | 14 | 46 | G1/8 | 47 | M8 | M10x1,25 | 17 | 6 | 5,3 |
| 40 | 24 | 16 | 35 | 18 | 10,2 | 9 | 14 | 56 | G1/8 | 57 | M10 | M12x1,25 | 19 | 6 | 5,3 |
| 50 | 32 | 20 | 40 | 24 | 12,2 | 11 | 18 | 66 | G1/8 | 67 | M12 | M16x1,5 | 24 | 7 | 6,5 |
| 63 | 32 | 20 | 45 | 24 | 12,2 | 11 | 18 | 79 | G1/8 | 80 | M12 | M16x1,5 | 24 | 7 | 6,5 |
| 80 | 40 | 25 | 45 | 16,5 | 16,2 | 14 | 23 | 93,5 | G1/8 | - | M16 | M20x1,5 | 30 | 9 | 2,6 |
| 100 | 40 | 25 | 55 | 21,5 | 16,2 | 14 | 28 | 112 | G1/8 | - | M16 | M20x1,5 | 30 | 9 | 2,6 |

| Ø | LK | LW | L2 | M | MM | PL | P1 | RR | RT | SW | TG | VD | WH | ZA | ZB |
|---|---|---|---|---|---|---|---|---|---|---|---|---|---|---|---|
| 32 | 2 | 5 | 7 | 4,5 | 12 | 7,5 | 2,5 | 5,2 | M6 | 10 | 32,5 | 4 | 14 | 44 | 58 |
| 40 | 2 | 5 | 7 | 4,5 | 16 | 7,5 | 2,5 | 5,2 | M6 | 13 | 38 | 4 | 14 | 45 | 59 |
| 50 | 2 | 6 | 10 | 6,5 | 20 | 7,5 | 2,5 | 6,5 | M8 | 17 | 46,5 | 5 | 18 | 45 | 63 |
| 63 | 2 | 6 | 10 | 6,5 | 20 | 7,5 | 2,5 | 6,5 | M8 | 17 | 56,5 | 5 | 18 | 50 | 68 |
| 80 | 2,5 | 8 | 20 | 5,5 | 25 | 8 | 3 | 8,4 | M10 | 22 | 72 | 4 | 32 | 54 | 86 |
| 100 | 2,5 | 8 | 20 | 8 | 25 | 10,5 | 3 | 8,4 | M10 | 22 | 89 | 4 | 32 | 67 | 99 |

A Pneumatic cushioning adjusting screw
B Groove for sensor

## Long piston RS Ø 32 ÷ 63

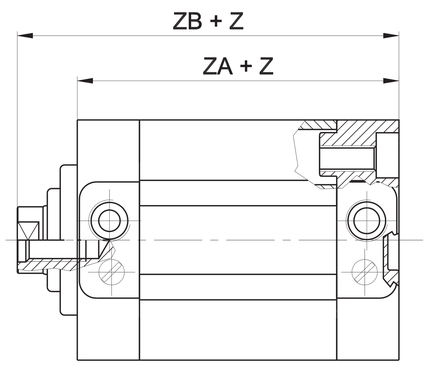


Z = Stroke

| Ø | ZA | ZB |
|---|---|---|
| 32 | 64 | 78 |
| 40 | 65 | 79 |
| 50 | 70 | 88 |
| 63 | 75 | 93 |

For cylinder types with long piston, dimensions **ZA** and **ZB** will be increased by **20 mm** (Ø32 - Ø40 mm) and by **25 mm** (Ø50 - Ø63 mm)

GRANZOW®

## Double acting through piston rod RS Ø 32 ÷ 63

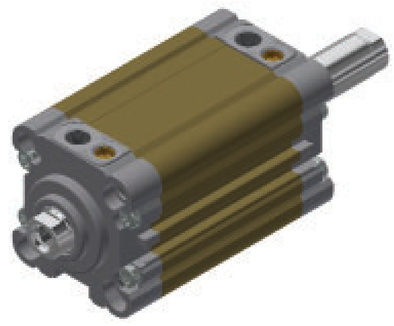

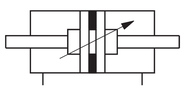

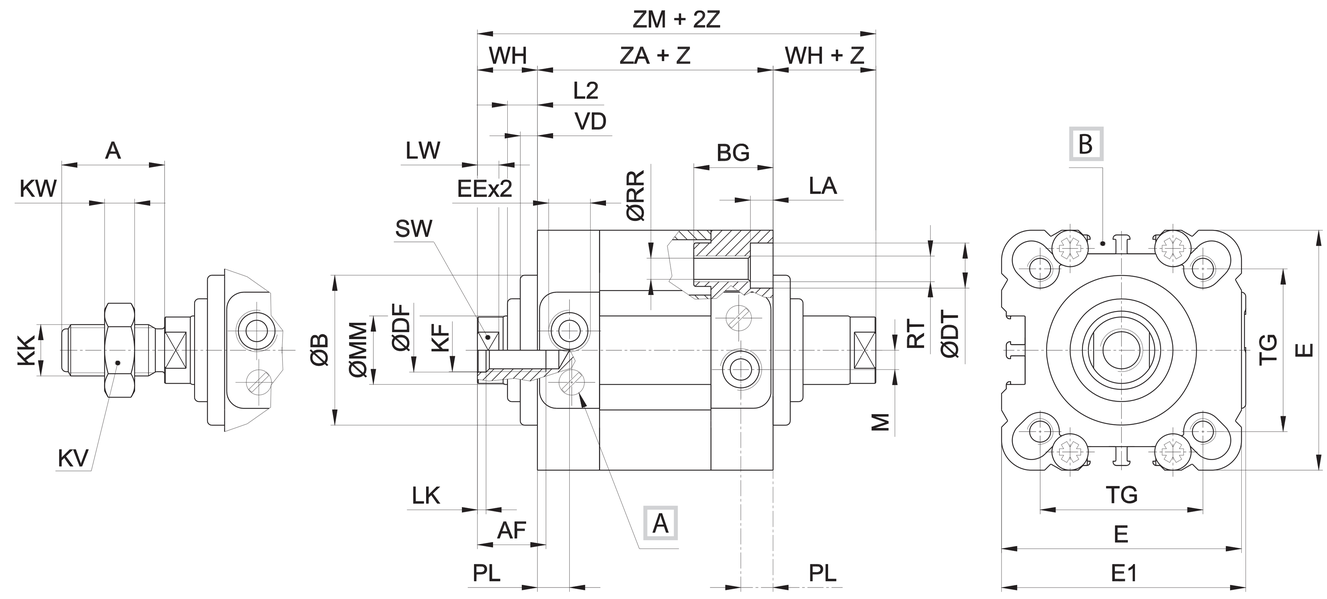


## Double acting through piston rod RS Ø 80 - 100

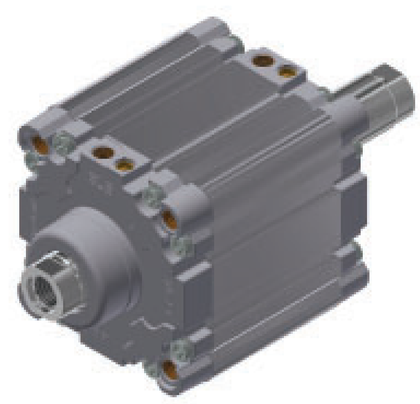

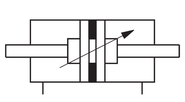

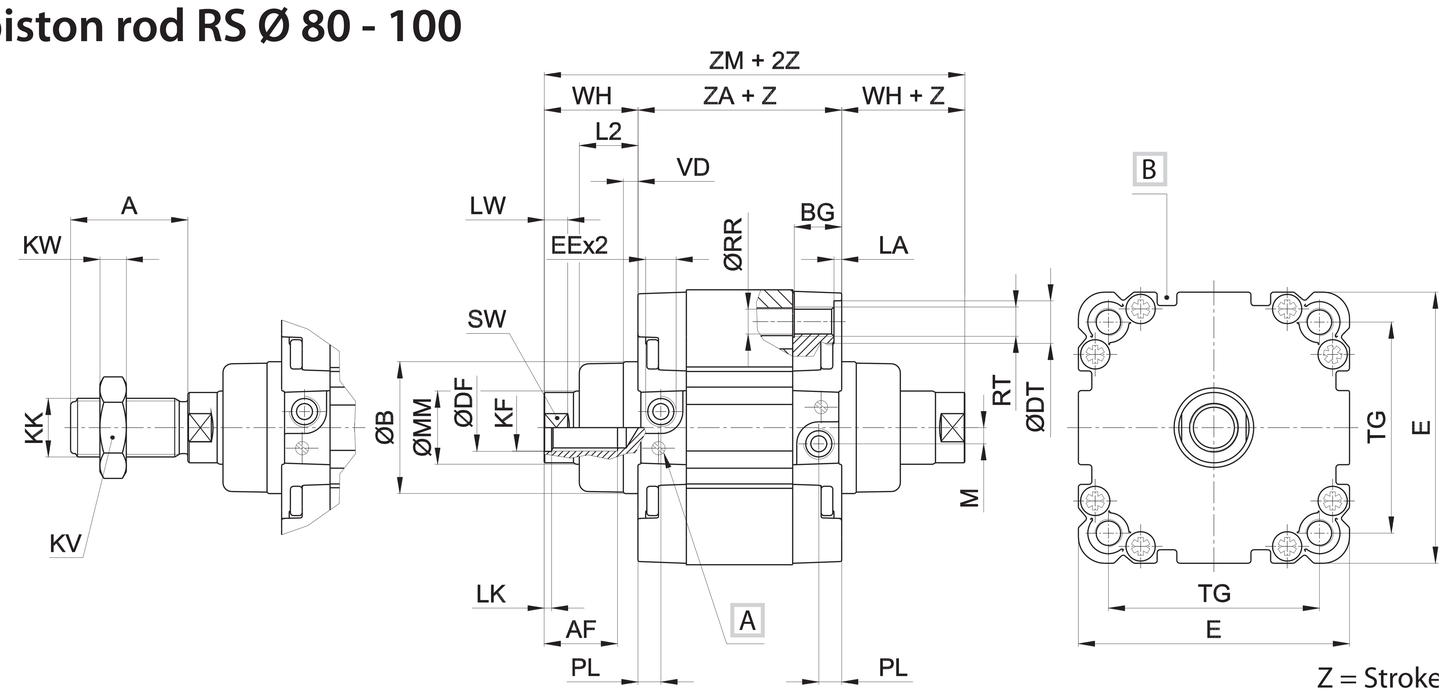


Z = Stroke

| Ø | A | AF | B | BG | DF | DT | E | EE | E1 | KF | KK | KV | KW | LA |
|---|---|---|---|---|---|---|---|---|---|---|---|---|---|---|
| 32 | 22 | 12 | 30 | 18 | 8,2 | 9 | 46 | G1/8 | 47 | M8 | M10x1,25 | 17 | 6 | 5,3 |
| 40 | 24 | 16 | 35 | 18 | 10,2 | 9 | 56 | G1/8 | 57 | M10 | M12x1,25 | 19 | 6 | 5,3 |
| 50 | 32 | 20 | 40 | 24 | 12,2 | 11 | 66 | G1/8 | 67 | M12 | M16x1,5 | 24 | 7 | 6,5 |
| 63 | 32 | 20 | 45 | 24 | 12,2 | 11 | 79 | G1/8 | 80 | M12 | M16x1,5 | 24 | 7 | 6,5 |
| 80 | 40 | 25 | 45 | 16,5 | 16,2 | 14 | 93,5 | G1/8 | - | M16 | M20x1,5 | 30 | 9 | 2,6 |
| 100 | 40 | 25 | 55 | 21,5 | 16,2 | 14 | 112 | G1/8 | - | M16 | M20x1,5 | 30 | 9 | 2,6 |

| Ø | LK | LW | L2 | M | MM | PL | RR | RT | SW | TG | VD | WH | ZA | ZM |
|---|---|---|---|---|---|---|---|---|---|---|---|---|---|---|
| 32 | 2 | 5 | 7 | 4,5 | 12 | 7,5 | 5,2 | M6 | 10 | 32,5 | 4 | 14 | 44 | 72 |
| 40 | 2 | 5 | 7 | 4,5 | 16 | 7,5 | 5,2 | M6 | 13 | 38 | 4 | 14 | 45 | 73 |
| 50 | 2 | 6 | 10 | 6,5 | 20 | 7,5 | 6,5 | M8 | 17 | 46,5 | 5 | 18 | 45 | 81 |
| 63 | 2 | 6 | 10 | 6,5 | 20 | 7,5 | 6,5 | M8 | 17 | 56,5 | 5 | 18 | 50 | 86 |
| 80 | 2,5 | 8 | 20 | 5,5 | 25 | 8 | 8,4 | M10 | 22 | 72 | 4 | 32 | 54 | 118 |
| 100 | 2,5 | 8 | 20 | 8 | 25 | 10,5 | 8,4 | M10 | 22 | 89 | 4 | 32 | 67 | 131 |

A Pneumatic cushioning adjusting screw
B Groove for sensor

## Female/male hollow through piston rod RS Ø 32 ÷ 100

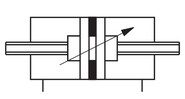

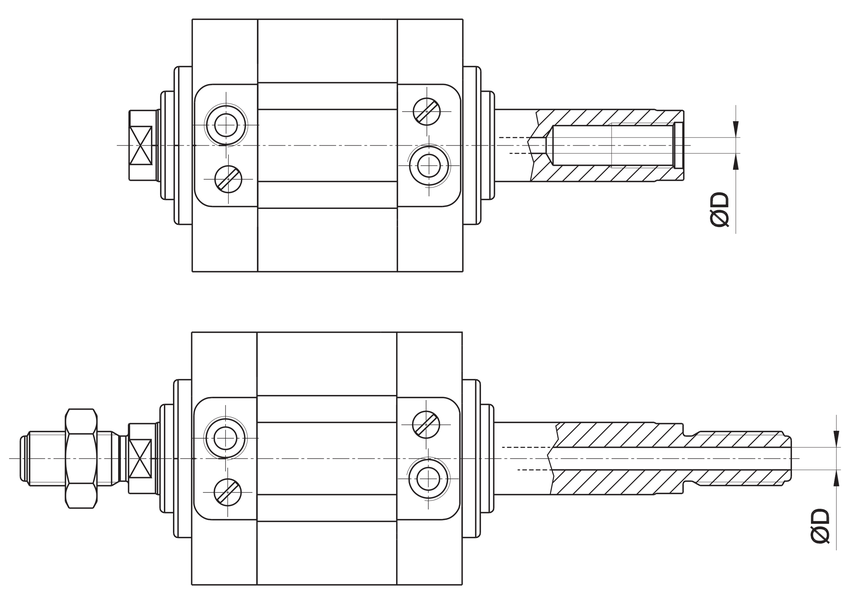


| Ø | D |
|---|---|
| 32 | 4,5 |
| 40 | 4,5 |
| 50 | 6 |
| 63 | 6 |
| 80 | 6 |
| 100 | 8 |

Ø16 ÷ 25 Max stroke **50 mm** Ø32 ÷ 63 Max stroke **75 mm** Ø80 - 100 Max stroke **100 mm**
For all other dimensions please refer to the through piston rod version

GRANZOW®

## Single acting retracted piston rod RS Ø 32 ÷ 63

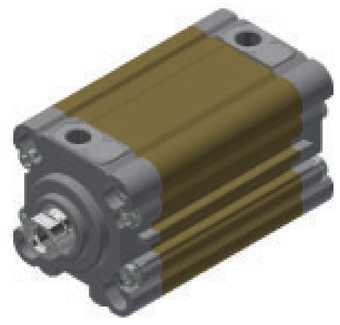

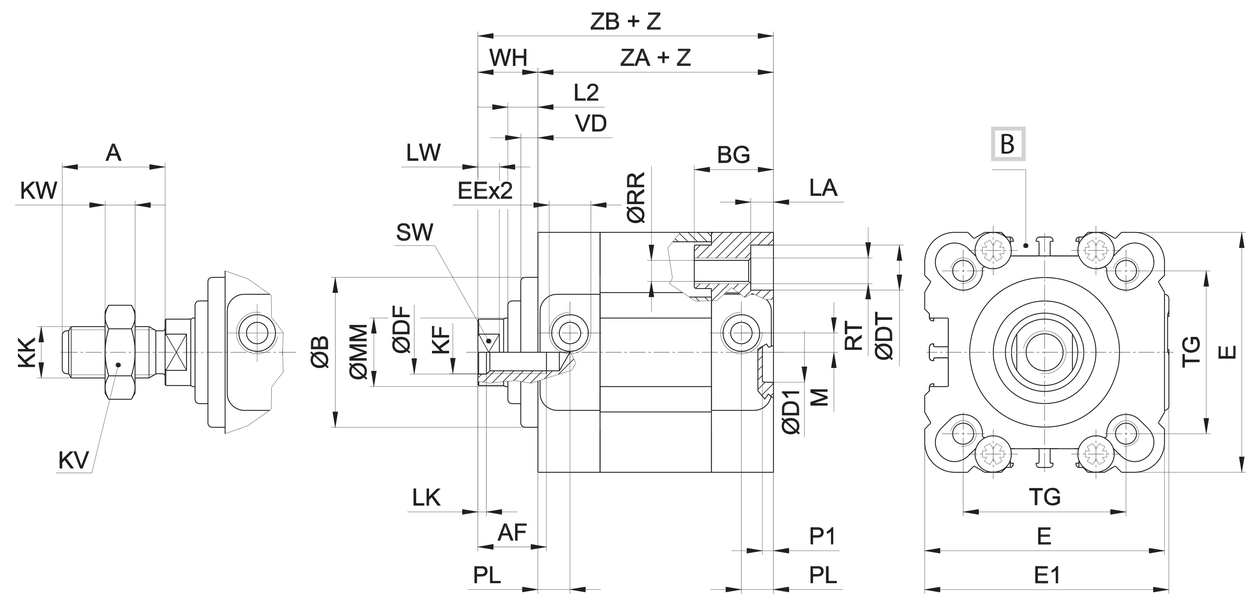

## Single acting retracted piston rod RS Ø 80 - 100

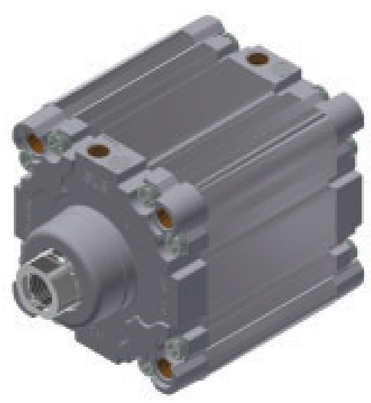

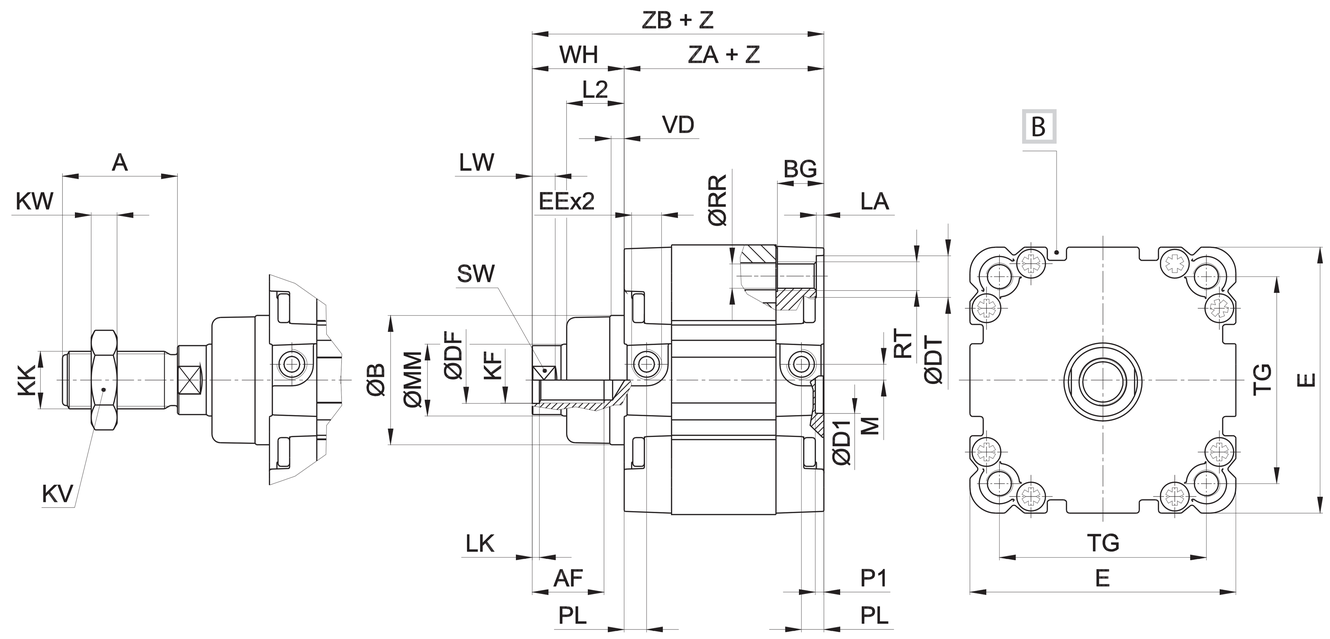

Z = Stroke

| Ø | A | AF | B | BG | DF | DT | D1 | E | EE | E1 | KF | KK | KV | KW | LA |
|---|---|---|---|---|---|---|---|---|---|---|---|---|---|---|---|
| | | | | | | | H11 | | | | | | | | |
| 32 | 22 | 12 | 30 | 18 | 8,2 | 9 | 14 | 46 | G1/8 | 47 | M8 | M10x1,25 | 17 | 6 | 5,3 |
| 40 | 24 | 16 | 35 | 18 | 10,2 | 9 | 14 | 56 | G1/8 | 57 | M10 | M12x1,25 | 19 | 6 | 5,3 |
| 50 | 32 | 20 | 40 | 24 | 12,2 | 11 | 18 | 66 | G1/8 | 67 | M12 | M16x1,5 | 24 | 7 | 6,5 |
| 63 | 32 | 20 | 45 | 24 | 12,2 | 11 | 18 | 79 | G1/8 | 80 | M12 | M16x1,5 | 24 | 7 | 6,5 |
| 80 | 40 | 25 | 45 | 16,5 | 16,2 | 14 | 23 | 93,5 | G1/8 | - | M16 | M20x1,5 | 30 | 9 | 2,6 |
| 100 | 40 | 25 | 55 | 21,5 | 16,2 | 14 | 28 | 112 | G1/8 | - | M16 | M20x1,5 | 30 | 9 | 2,6 |

| Ø | LK | LW | L2 | M | MM | PL | P1 | RR | RT | SW | TG | VD | WH | ZA | ZM |
|---|---|---|---|---|---|---|---|---|---|---|---|---|---|---|---|
| | | | | | | | | | | | | | | | |
| 32 | 2 | 5 | 7 | 4,5 | 12 | 7,5 | 2,5 | 5,2 | M6 | 10 | 32,5 | 4 | 14 | 44 | 58 |
| 40 | 2 | 5 | 7 | 4,5 | 16 | 7,5 | 2,5 | 5,2 | M6 | 13 | 38 | 4 | 14 | 45 | 59 |
| 50 | 2 | 6 | 10 | 6,5 | 20 | 7,5 | 2,5 | 6,5 | M8 | 17 | 46,5 | 5 | 18 | 45 | 63 |
| 63 | 2 | 6 | 10 | 6,5 | 20 | 7,5 | 2,5 | 6,5 | M8 | 17 | 56,5 | 5 | 18 | 50 | 68 |
| 80 | 2,5 | 8 | 20 | 5,5 | 25 | 8 | 3 | 8,4 | M10 | 22 | 72 | 4 | 32 | 54 | 86 |
| 100 | 2,5 | 8 | 20 | 8 | 25 | 10,5 | 3 | 8,4 | M10 | 22 | 89 | 4 | 32 | 67 | 99 |

B Groove for sensor

GRANZOW®

## Single acting extended piston rod RS Ø 32 ÷ 63

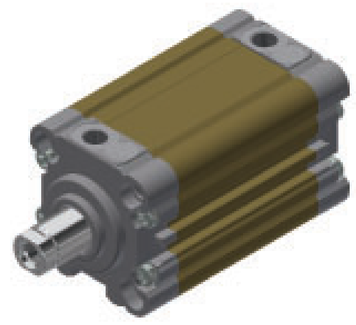

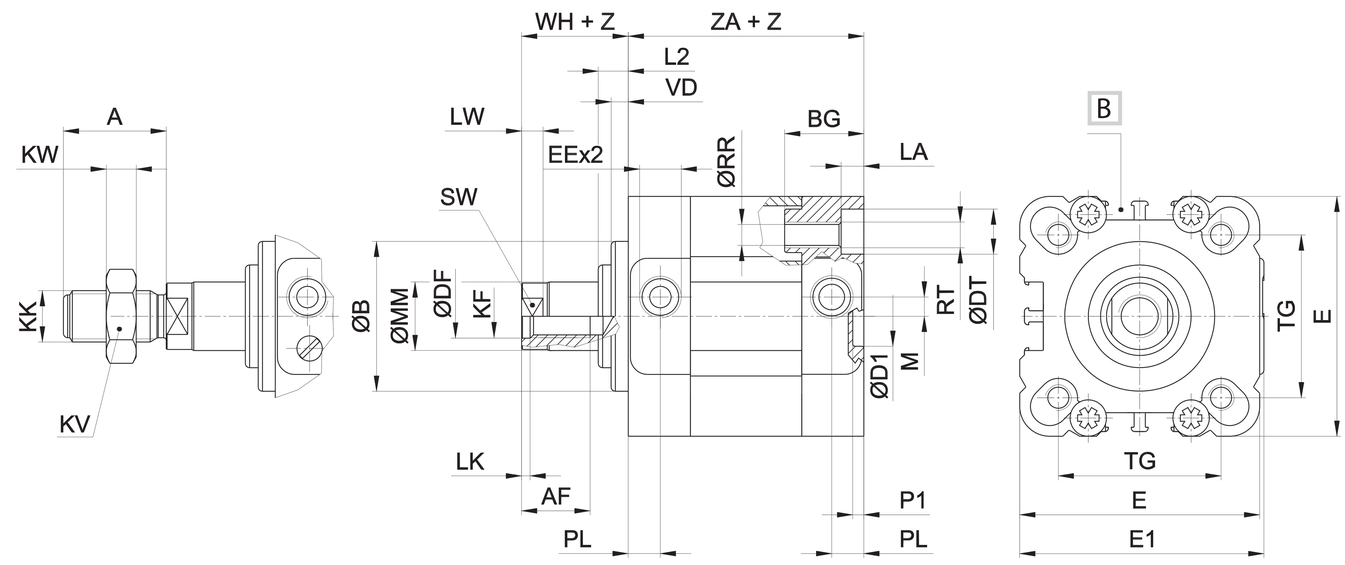

## Single acting extended piston rod RS Ø 80 - 100

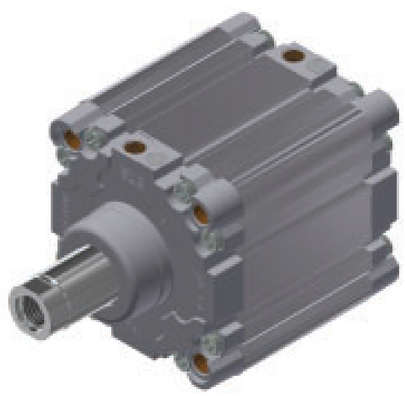

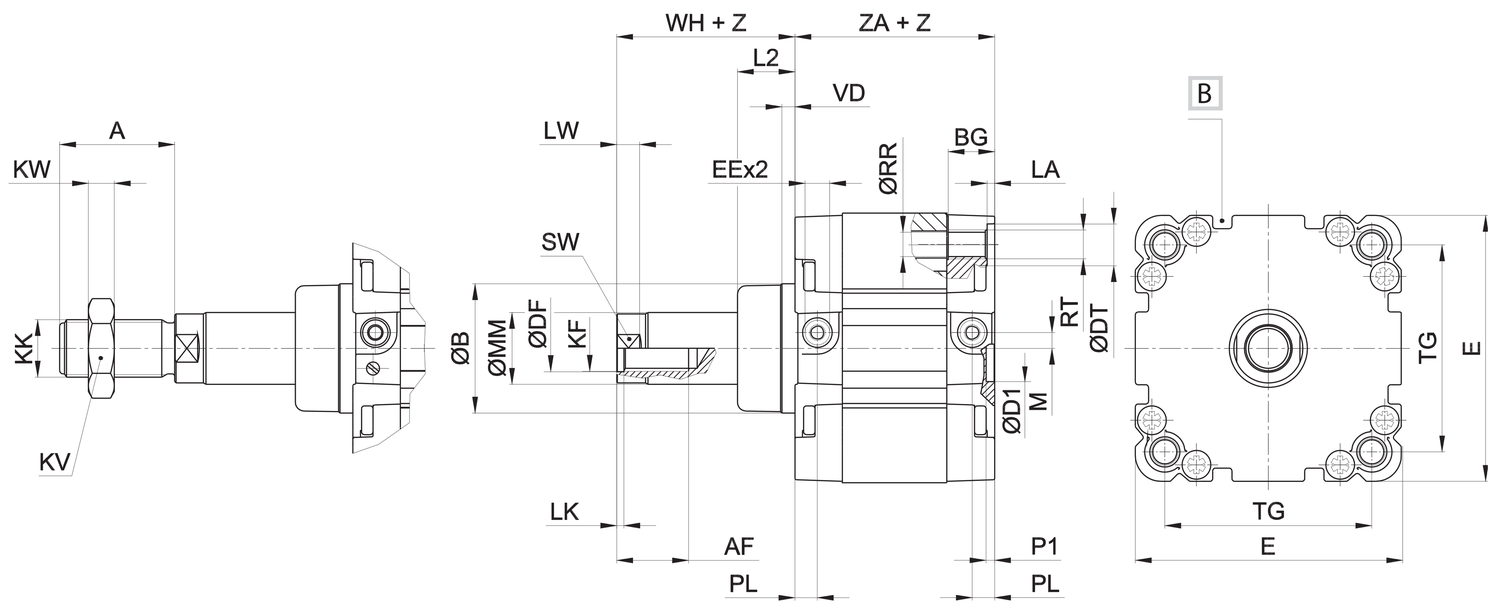

Z = Stroke

| Ø | A | AF | B | BG | DF | DT | D1 | E | EE | E1 | KF | KK | KV | KW |
|---|---|---|---|---|---|---|---|---|---|---|---|---|---|---|
| | | | | | | | H11 | | | | | | | |
| 32 | 22 | 12 | 30 | 18 | 8,2 | 9 | 14 | 46 | G1/8 | 47 | M8 | M10x1,25 | 17 | 6 |
| 40 | 24 | 16 | 35 | 18 | 10,2 | 9 | 14 | 56 | G1/8 | 57 | M10 | M12x1,25 | 19 | 6 |
| 50 | 32 | 20 | 40 | 24 | 12,2 | 11 | 18 | 66 | G1/8 | 67 | M12 | M16x1,5 | 24 | 7 |
| 63 | 32 | 20 | 45 | 24 | 12,2 | 11 | 18 | 79 | G1/8 | 80 | M12 | M16x1,5 | 24 | 7 |
| 80 | 40 | 25 | 45 | 16,5 | 16,2 | 14 | 23 | 93,5 | G1/8 | - | M16 | M20x1,5 | 30 | 9 |
| 100 | 40 | 25 | 55 | 21,5 | 16,2 | 14 | 28 | 112 | G1/8 | - | M16 | M20x1,5 | 30 | 9 |

| Ø | LA | LK | LW | L2 | M | MM | PL | P1 | RR | RT | SW | TG | VD | WH | ZA |
|---|---|---|---|---|---|---|---|---|---|---|---|---|---|---|---|
| | | | | | | | | | | | | | | | |
| 32 | 5,3 | 2 | 5 | 7 | 4,5 | 12 | 7,5 | 2,5 | 5,2 | M6 | 10 | 32,5 | 4 | 14 | 44 |
| 40 | 5,3 | 2 | 5 | 7 | 4,5 | 16 | 7,5 | 2,5 | 5,2 | M6 | 13 | 38 | 4 | 14 | 45 |
| 50 | 6,5 | 2 | 6 | 10 | 6,5 | 20 | 7,5 | 2,5 | 6,5 | M8 | 17 | 46,5 | 5 | 18 | 45 |
| 63 | 6,5 | 2 | 6 | 10 | 6,5 | 20 | 7,5 | 2,5 | 6,5 | M8 | 17 | 56,5 | 5 | 18 | 50 |
| 80 | 2,6 | 2,5 | 8 | 20 | 5,5 | 25 | 8 | 3 | 8,4 | M10 | 22 | 72 | 4 | 32 | 54 |
| 100 | 2,6 | 2,5 | 8 | 20 | 8 | 25 | 10,5 | 3 | 8,4 | M10 | 22 | 89 | 4 | 32 | 67 |

B Groove for sensor

GRANZOW®

## Double acting non-rotating guided piston rod RS Ø 32 ÷ 63

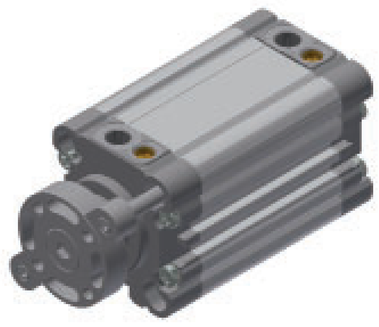

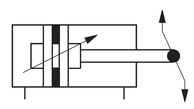

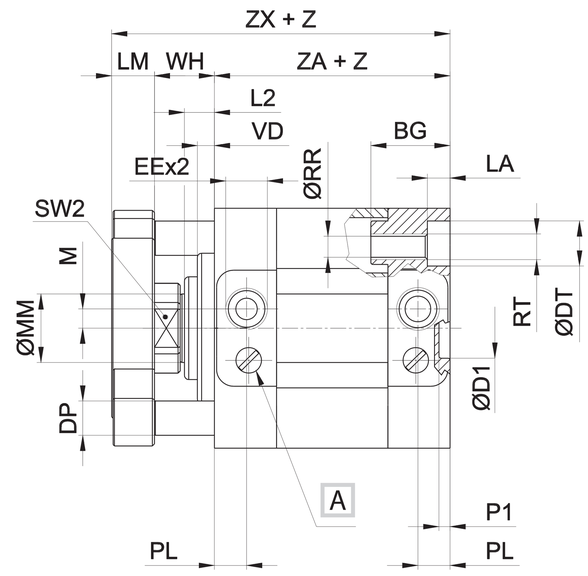


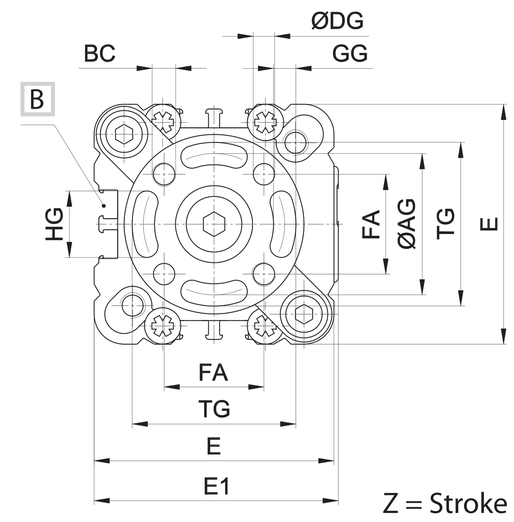


Z = Stroke

| Ø | AG | BC | BG | DG | DP | DT | D1 | E | EE | E1 | FA | GG | HG | LA |
|---|---|---|---|---|---|---|---|---|---|---|---|---|---|---|
| 32 | 28 | M5 | 18 | 5 | 6 | 9 | 14 | 46 | G1/8 | 47 | 19,8 | 5,2 | 11 | 5,3 |
| 40 | 33 | M5 | 18 | 5 | 8 | 9 | 14 | 56 | G1/8 | 57 | 23,3 | 5,2 | 15 | 5,3 |
| 50 | 42 | M6 | 24 | 6 | 8 | 11 | 18 | 66 | G1/8 | 67 | 29,7 | 6,2 | 19 | 6,5 |
| 63 | 50 | M6 | 24 | 6 | 10 | 11 | 18 | 79 | G1/8 | 80 | 35,4 | 6,2 | 25 | 6,5 |

| Ø | LM | L2 | M | MM | PL | P1 | RR | RT | SW2 | TG | VD | WH | ZA | ZX |
|---|---|---|---|---|---|---|---|---|---|---|---|---|---|---|
| 32 | 10 | 7 | 4,5 | 12 | 7,5 | 2,5 | 5,2 | M6 | 17 | 32,5 | 4 | 14 | 44 | 68 |
| 40 | 10 | 7 | 4,5 | 16 | 7,5 | 2,5 | 5,2 | M6 | 19 | 38 | 4 | 14 | 45 | 69 |
| 50 | 12 | 10 | 6,5 | 20 | 7,5 | 2,5 | 6,5 | M8 | 24 | 46,5 | 5 | 18 | 45 | 75 |
| 63 | 12 | 10 | 6,5 | 20 | 7,5 | 2,5 | 6,5 | M8 | 24 | 56,5 | 5 | 18 | 50 | 80 |

A Pneumatic cushioning adjusting screw
B Groove for sensor

## Double acting non-rotating guided through piston rod RS Ø 32 ÷ 63

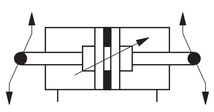

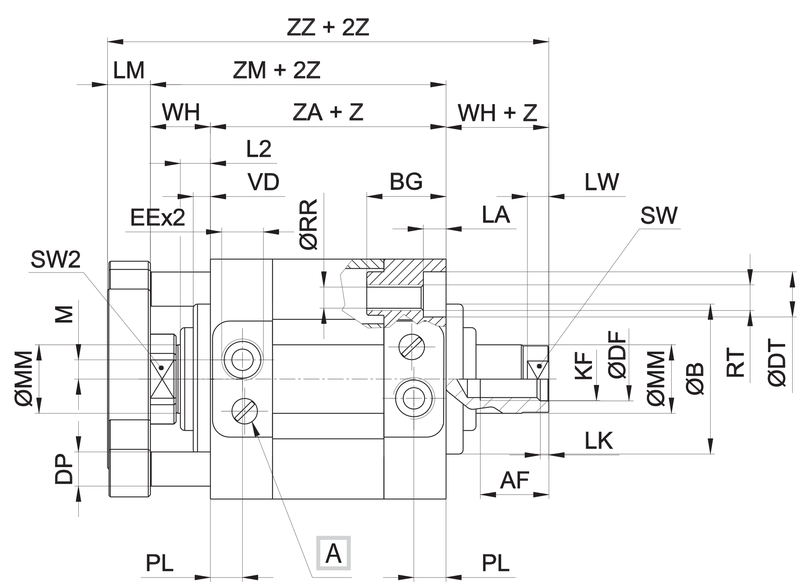


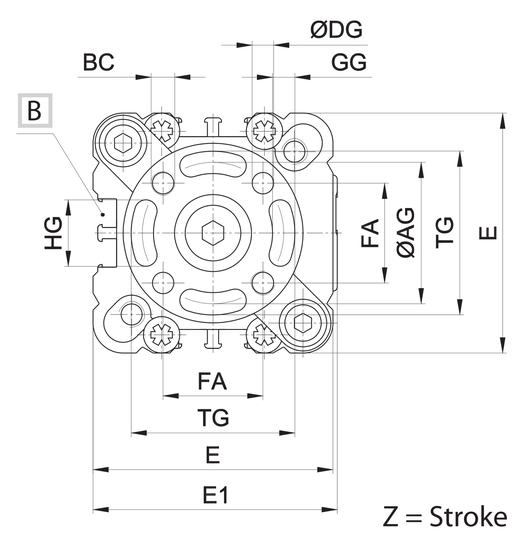


Z = Stroke

| Ø | AF | AG | B | BC | BG | DF | DG | DP | D1 | E | EE | E1 | FA | GG | HG | KF | LA |
|---|---|---|---|---|---|---|---|---|---|---|---|---|---|---|---|---|---|
| 32 | 12 | 28 | 30 | M5 | 18 | 8,2 | 5 | 6 | 14 | 46 | G1/8 | 47 | 19,8 | 5,2 | 11 | M8 | 5,3 |
| 40 | 16 | 33 | 35 | M5 | 18 | 10,2 | 5 | 8 | 14 | 56 | G1/8 | 57 | 23,3 | 5,2 | 15 | M10 | 5,3 |
| 50 | 20 | 42 | 40 | M6 | 24 | 12,2 | 6 | 8 | 18 | 66 | G1/8 | 67 | 29,7 | 6,2 | 19 | M12 | 6,5 |
| 63 | 20 | 50 | 45 | M6 | 24 | 12,2 | 6 | 10 | 18 | 79 | G1/8 | 80 | 35,4 | 6,2 | 25 | M12 | 6,5 |

| Ø | LK | LM | LW | L2 | M | MM | PL | RR | RT | SW | SW2 | TG | VD | WH | ZA | ZM | ZZ |
|---|---|---|---|---|---|---|---|---|---|---|---|---|---|---|---|---|---|
| 32 | 2 | 10 | 5 | 7 | 4,5 | 12 | 7,5 | 5,2 | M6 | 10 | 17 | 32,5 | 4 | 14 | 44 | 72 | 82 |
| 40 | 2 | 10 | 5 | 7 | 4,5 | 16 | 7,5 | 5,2 | M6 | 13 | 19 | 38 | 4 | 14 | 45 | 73 | 83 |
| 50 | 2 | 12 | 6 | 10 | 6,5 | 20 | 7,5 | 6,5 | M8 | 17 | 24 | 46,5 | 5 | 18 | 45 | 81 | 93 |
| 63 | 2 | 12 | 6 | 10 | 6,5 | 20 | 7,5 | 6,5 | M8 | 17 | 24 | 56,5 | 5 | 18 | 50 | 86 | 98 |

A Pneumatic cushioning adjusting screw
B Groove for sensor

GRANZOW®

## Double acting standard RQ Ø 32 ÷ 63

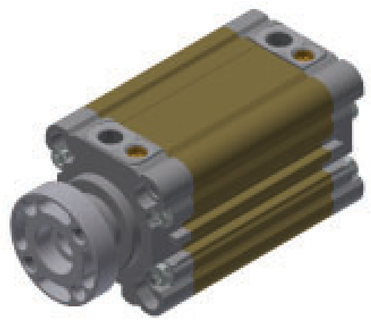

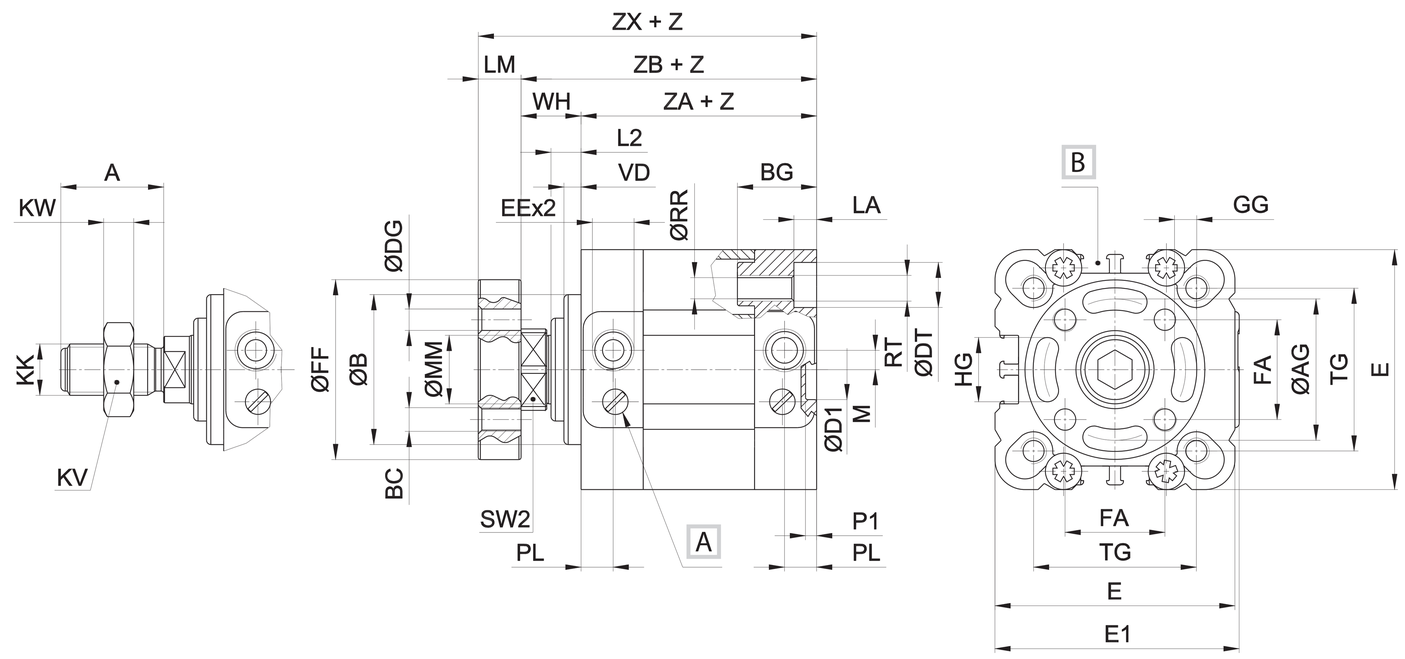


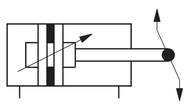

Z = Stroke

| Ø | A | AG | B | BC | BG | DG | DT | D1 | E | EE | E1 | FA | FF | GG | HG | KK | KV | KW |
|---|---|---|---|---|---|---|---|---|---|---|---|---|---|---|---|---|---|---|
| | | | | | | | | H11 | | | | | | | | | | |
| **32** | 22 | 28 | 30 | M5 | 18 | 5 | 9 | 14 | 46 | G1/8 | 47 | 19,8 | 37 | 5,2 | 11 | M10x1,25 | 17 | 6 |
| **40** | 24 | 33 | 35 | M5 | 18 | 5 | 9 | 14 | 56 | G1/8 | 57 | 23,3 | 42 | 5,2 | 15 | M12x1,25 | 19 | 6 |
| **50** | 32 | 42 | 40 | M6 | 24 | 6 | 11 | 18 | 66 | G1/8 | 67 | 29,7 | 52 | 6,2 | 19 | M16x1,5 | 24 | 7 |
| **63** | 32 | 50 | 45 | M6 | 24 | 6 | 11 | 18 | 79 | G1/8 | 80 | 35,4 | 64 | 6,2 | 25 | M16x1,5 | 24 | 7 |

| Ø | LA | LM | LW | L2 | M | MM | PL | P1 | RR | RT | SW | SW2 | TG | VD | WH | ZA | ZB | ZX |
|---|---|---|---|---|---|---|---|---|---|---|---|---|---|---|---|---|---|---|
| **32** | 5,3 | 10 | 5 | 7 | 4,5 | 12 | 7,5 | 2,5 | 5,2 | M6 | 10 | 17 | 32,5 | 4 | 14 | 44 | 58 | 68 |
| **40** | 5,3 | 10 | 5 | 7 | 4,5 | 16 | 7,5 | 2,5 | 5,2 | M6 | 13 | 19 | 38 | 4 | 14 | 45 | 59 | 69 |
| **50** | 6,5 | 12 | 6 | 10 | 6,5 | 20 | 7,5 | 2,5 | 6,5 | M8 | 17 | 24 | 46,5 | 5 | 18 | 45 | 63 | 75 |
| **63** | 6,5 | 12 | 6 | 10 | 6,5 | 20 | 7,5 | 2,5 | 6,5 | M8 | 17 | 24 | 56,5 | 5 | 18 | 50 | 68 | 80 |

A Pneumatic cushioning adjusting screw
B Groove for sensor

## Long piston RQ Ø 32 ÷ 63

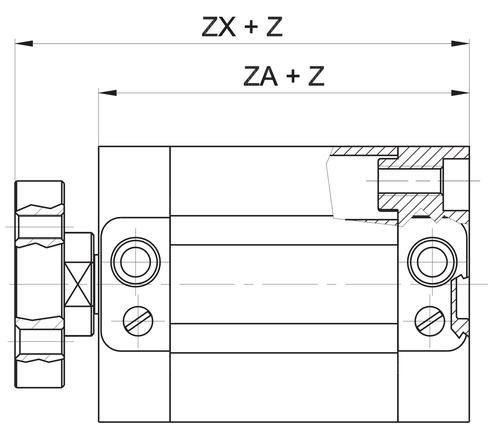


Z = Stroke

| Ø | ZA | ZX |
|---|---|---|
| **32** | 64 | 88 |
| **40** | 65 | 89 |
| **50** | 70 | 100 |
| **63** | 75 | 105 |

For cylinder types with long piston, dimensions **ZA** and **ZB** will be increased by **20 mm** (Ø32 - Ø40 mm) and by **25 mm** (Ø50 - Ø63 mm)

GRANZOW®

## Double acting through piston rod RQ Ø 32 ÷ 63

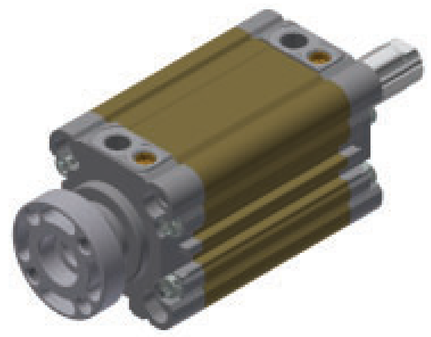

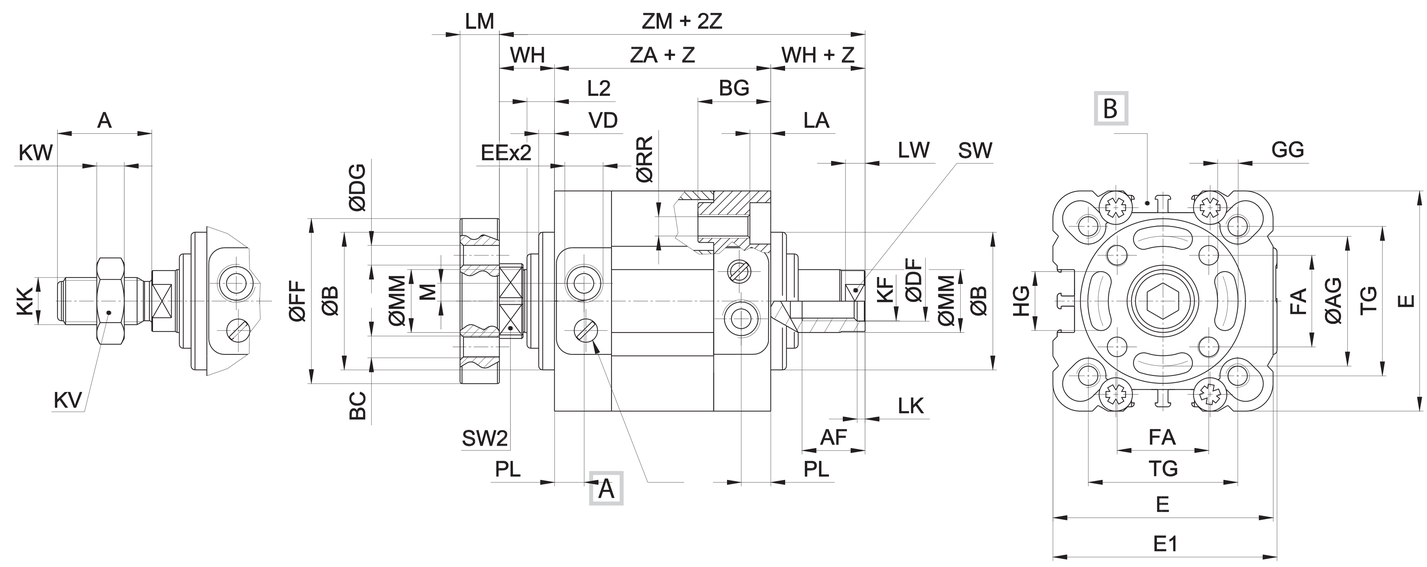


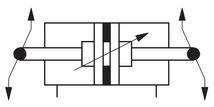

| Ø | A | AF | AG | B | BC | BG | DF | DG | E | EE | E1 | FA | FF | GG | HG | KF | KK |
|---|---|---|---|---|---|---|---|---|---|---|---|---|---|---|---|---|---|
| 32 | 22 | 12 | 28 | 30 | M5 | 18 | 8,2 | 5 | 46 | G1/8 | 47 | 19,8 | 37 | 5,2 | 11 | M8 | M10x1,25 |
| 40 | 24 | 16 | 33 | 35 | M5 | 18 | 10,2 | 5 | 56 | G1/8 | 57 | 23,3 | 42 | 5,2 | 15 | M10 | M12x1,25 |
| 50 | 32 | 20 | 42 | 40 | M6 | 24 | 12,2 | 6 | 66 | G1/8 | 67 | 29,7 | 52 | 6,2 | 19 | M12 | M16x1,5 |
| 63 | 32 | 20 | 50 | 45 | M6 | 24 | 12,2 | 6 | 79 | G1/8 | 80 | 35,4 | 64 | 6,2 | 25 | M12 | M16x1,5 |

| Ø | KV | KW | LA | LK | LM | LW | L2 | M | MM | PL | RR | SW | SW2 | TG | VD | WH | ZA | ZM |
|---|---|---|---|---|---|---|---|---|---|---|---|---|---|---|---|---|---|---|
| 32 | 17 | 6 | 5,3 | 2 | 10 | 5 | 7 | 4,5 | 12 | 7,5 | 5,2 | 10 | 17 | 32,5 | 4 | 14 | 44 | 72 |
| 40 | 19 | 6 | 5,3 | 2 | 10 | 5 | 7 | 4,5 | 16 | 7,5 | 5,2 | 13 | 19 | 38 | 4 | 14 | 45 | 73 |
| 50 | 24 | 7 | 6,5 | 2 | 12 | 6 | 10 | 6,5 | 20 | 7,5 | 6,5 | 17 | 24 | 46,5 | 5 | 18 | 45 | 81 |
| 63 | 24 | 7 | 6,5 | 2 | 12 | 6 | 10 | 6,5 | 20 | 7,5 | 6,5 | 17 | 24 | 56,5 | 5 | 18 | 50 | 86 |

A Pneumatic cushioning adjusting screw
B Groove for sensor

Z = Stroke

## Male hollow through piston rod RQ Ø 32 ÷ 63

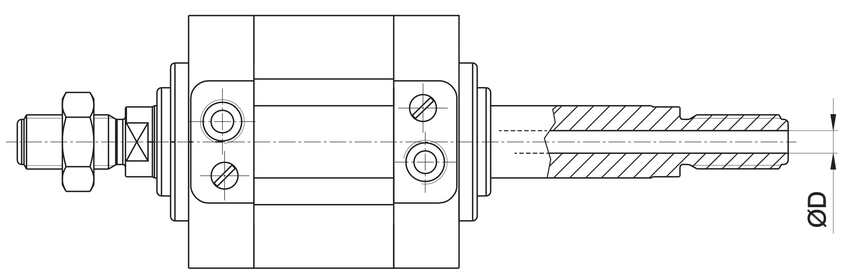


| Ø | D |
|---|---|
| 32 | 3,5 |
| 40 | 3,5 |
| 50 | 4,5 |
| 63 | 4,5 |

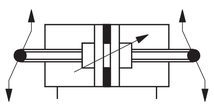

Ø16 ÷ 25 Max stroke **50 mm** Ø32 ÷ 63 Max stroke **75 mm**
For all other dimensions please refer to the through piston rod version
Female hollow through piston rod upon request

GRANZOW®

## Tandem version

### CODIFICATION KEY

| R | S | 2 | A | 0 | 3 | 2 | 0 | 8 | 0 |
|---|---|---|---|---|---|---|---|---|---|
| 1 | | 2 | | 3 | | | 4 | | |

| 1 Series | 2 Type | 3 Bore (mm) | 4 Stroke (mm) |
|---|---|---|---|
| **RS** = Ø 32÷100 mm - STRONG Compact Cylinders<br>**RQ** = Ø 32÷63 mm - STRONG Compact Cylinders Octagonal tube NON-ROTATING | **1A =** Double thrust tandem, stainless steel female piston rod (with flange for RQ series)<br>**2A =** Double thrust tandem, chromium-plated steel female piston rod (with flange for RQ series)<br>**3A =** Double thrust tandem, stainless steel male piston rod<br>**4A =** Double thrust tandem, chromium-plated steel male piston rod | **032** = Ø32 **063** = Ø63<br>**040** = Ø40 **080** = Ø80<br>**050** = Ø50 **100** = Ø100 | Upon request |

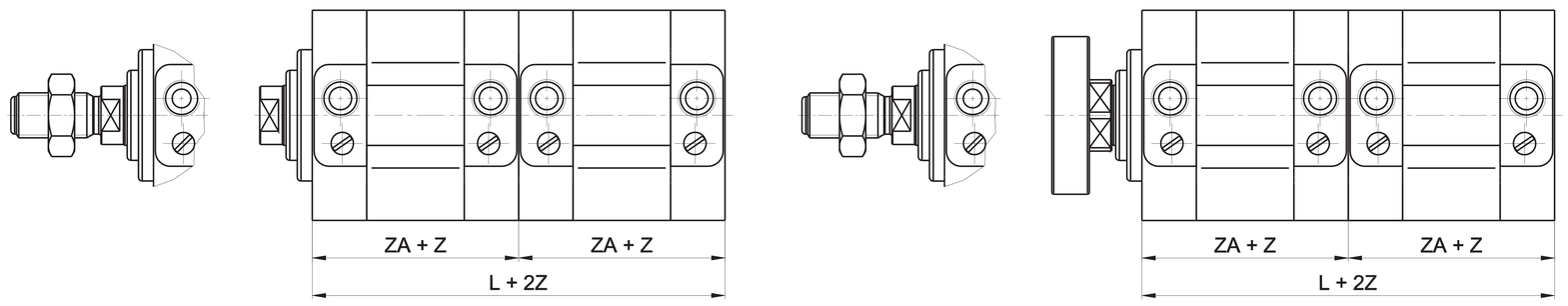


| Ø | L | ZA |
|---|---|---|
| 32 | 88 | 44 |
| 40 | 90 | 45 |
| 50 | 90 | 45 |
| 63 | 100 | 50 |
| 80 | 108 | 54 |
| 100 | 134 | 67 |

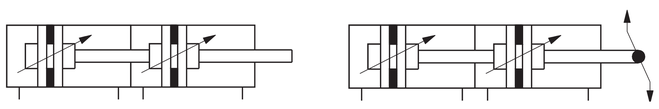

Tandem cylinders are constructed using two pistons coupled together which double the force in forward movement compared to the traditional cylinders of the same bore size

## Two-position tandem version

### CODIFICATION KEY

| R | S | 2 | B | 0 | 3 | 2 | 0 | 3 | 0 | 0 | 5 | 0 |
|---|---|---|---|---|---|---|---|---|---|---|---|---|
| 1 | | 2 | | 3 | | | 4 | | | 5 | | |

| 1 Series | 2 Type | 3 Bore (mm) | 4 Stroke Z1 (mm) | 5 Stroke Z2 (mm) |
|---|---|---|---|---|
| **RS** = Ø 32÷100 mm - STRONG Compact Cylinders<br>**RQ** = Ø 32÷63 mm - STRONG Compact Cylinders Octagonal tube NON-ROTATING | **1B** = Two-position tandem, stainless steel female piston rod (with flange for RQ series)<br>**2B** = Two-position tandem, chromium-plated steel female piston rod (with flange for RQ series)<br>**3B** = Two-position tandem, stainless steel male piston rod<br>**4B** = Two-position tandem, chromium-plated steel male piston rod | **032** = Ø32 **063** = Ø63<br>**040** = Ø40 **080** = Ø80<br>**050** = Ø50 **100** = Ø100 | Upon request | Upon request |

Z = Stroke

| Ø | L | ZA |
|---|---|---|
| 32 | 88 | 44 |
| 40 | 90 | 45 |
| 50 | 90 | 45 |
| 63 | 100 | 50 |
| 80 | 108 | 54 |
| 100 | 134 | 67 |

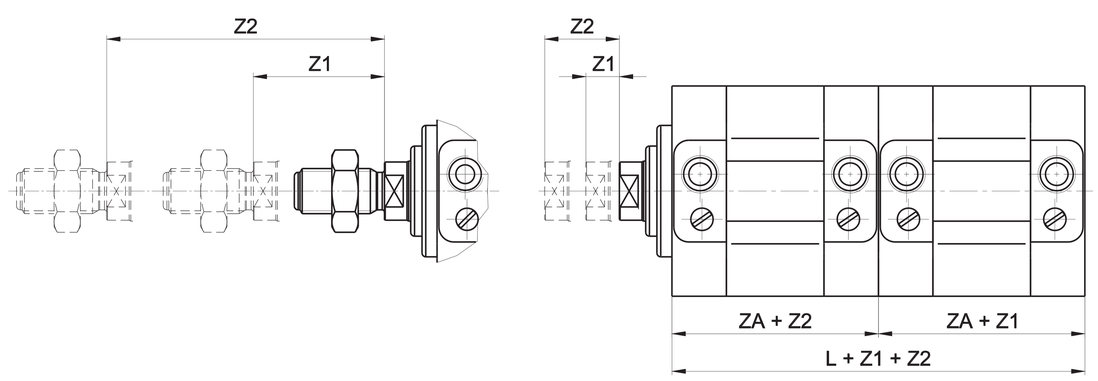


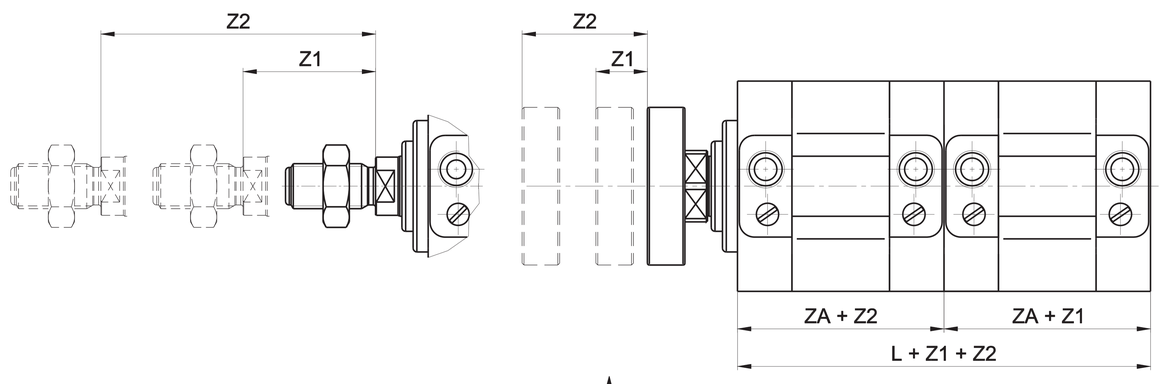


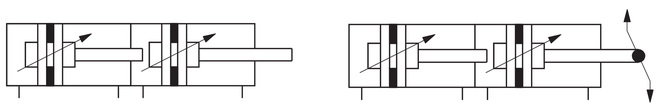

Two-position cylinders with two independent piston-rods which allow to realize a double positioning in which the thrust forces are the same as those of a cylinder of the same bore size

For all other dimensions please refer to the standard version
For other types of cylinders kindly contact our sales office

GRANZOW®

## Opposed tandem version

### CODIFICATION KEY

| R | S | 2 | C | 0 | 4 | 0 | 0 | 2 | 0 | 0 | 4 | 0 |
|---|---|---|---|---|---|---|---|---|---|---|---|---|
| 1 | | 2 | | 3 | | | 4 | | | 5 | | |

| 1 Series | 2 Type | 3 Bore (mm) | 4 Stroke Z1 (mm) | 5 Stroke Z2 (mm) |
|---|---|---|---|---|
| **RS** = Ø 32÷100 mm - STRONG Compact Cylinders<br>**RQ** = Ø 32÷63 mm - STRONG Compact Cylinders Octagonal tube NON-ROTATING | **1C** = Opposed tandem, stainless steel female piston rod (with flange for RQ series)<br>**2C** = Opposed tandem, chromium-plated steel female piston rod (with flange for RQ series)<br>**3C** = Opposed tandem, stainless steel male piston rod<br>**4C** = Opposed tandem, chromium-plated steel male piston rod | **032** = Ø32 **063** = Ø63<br>**040** = Ø40 **080** = Ø80<br>**050** = Ø50 **100** = Ø100 | Upon request | Upon request |

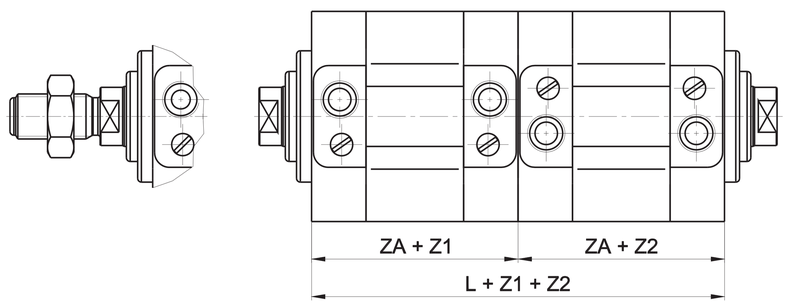


Z = Stroke

| Ø | L | ZA |
|---|---|---|
| 32 | 88 | 44 |
| 40 | 90 | 45 |
| 50 | 90 | 45 |
| 63 | 100 | 50 |
| 80 | 108 | 54 |
| 100 | 134 | 67 |

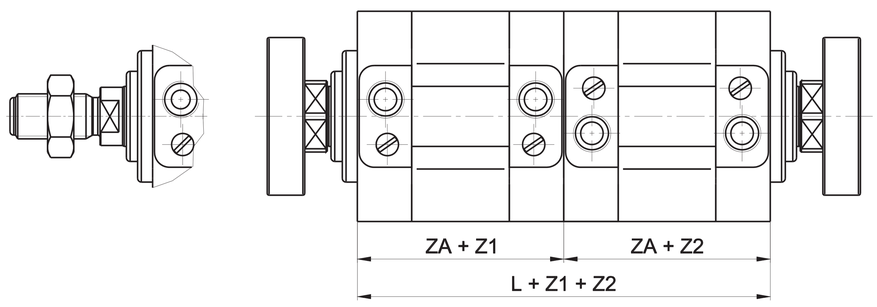


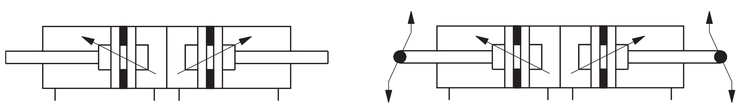

Type of cylinder characterized by the coupling of two cylinders piston rods move in opposite directions. The values of the thrust force are the same as those of the traditional cylinders

## With common piston rod tandem version (upon request)

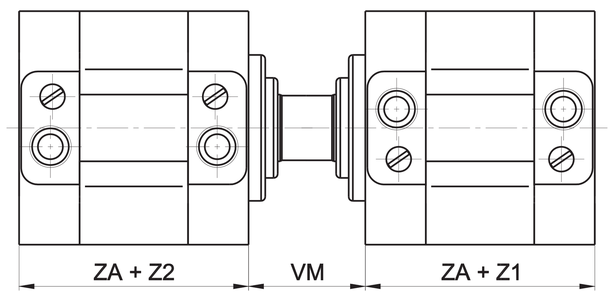


Z = Stroke

| Ø | L | VM | ZA |
|---|---|---|---|
| 32 | 88 | 14 | 44 |
| 40 | 90 | 14 | 45 |
| 50 | 90 | 16 | 45 |
| 63 | 100 | 16 | 50 |
| 80 | 108 | 20 | 54 |
| 100 | 134 | 20 | 67 |

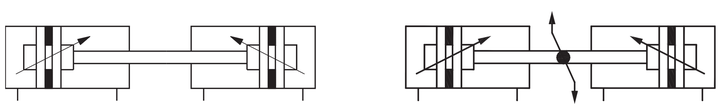

Type of cylinder characterized by the coupling of two cylinders and whose piston rods move in opposite directions. The values of the thrust force are the same as those of the traditional cylinders

## Three-position version (upon request)

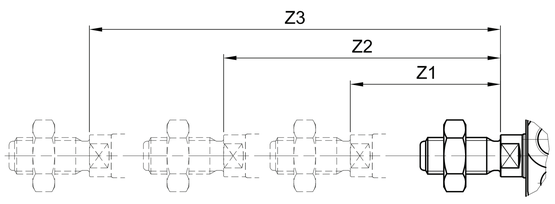


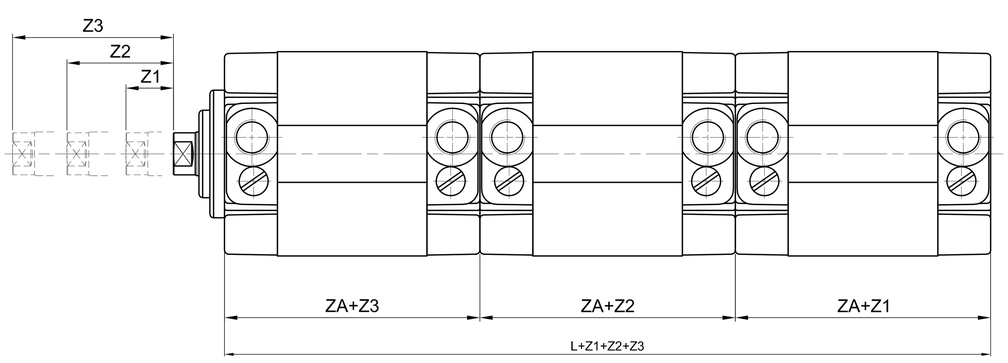


Z = Stroke

| Ø | L | ZA |
|---|---|---|
| 32 | 132 | 44 |
| 40 | 135 | 45 |
| 50 | 135 | 45 |
| 63 | 150 | 50 |
| 80 | 162 | 54 |
| 100 | 201 | 67 |

For all other dimensions please refer to the standard version
For other types of cylinders kindly contact our sales office

GRANZOW®

## Female rear hinge (ISO MP2) with pin

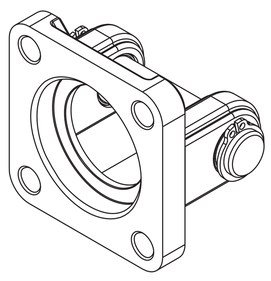

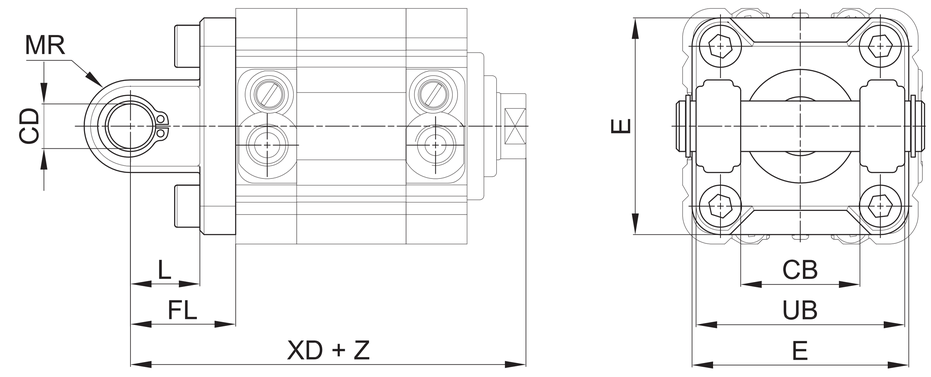


**Material:** Aluminium, zinc-plated steel pin

Z = Stroke

| Cylinder Ø | CB | CD | E | FL | L | MR | UB | XD | | Mass | Part no. |
|---|---|---|---|---|---|---|---|---|---|---|---|
| | H14 | H9 | | ± 0,2 | min. | Max | h14 | | | g | |
| 32 | 26 | 10 | 48 | 22 | 12 | 11 | 45 | 80 | ±1,25 | 75 | KF-10032A |
| 40 | 28 | 12 | 54 | 25 | 15 | 13 | 52 | 84 | ±1,25 | 110 | KF-10040A |
| 50 | 32 | 12 | 65 | 27 | 15 | 13 | 60 | 90 | ±1,25 | 150 | KF-10050A |
| 63 | 40 | 16 | 75 | 32 | 20 | 17 | 70 | 100 | ±1,6 | 270 | KF-10063A |
| 80 | 50 | 16 | 95 | 36 | 20 | 17 | 90 | 103 | ±1,6 | 420 | KF-10080A |
| 100 | 60 | 20 | 115 | 41 | 25 | 21 | 110 | 118 | ±1,6 | 765 | KF-10100A |

By removing the pin it is possible to use the female hinge also on the front side

## Narrow female hinge with pin (DIN 648K)

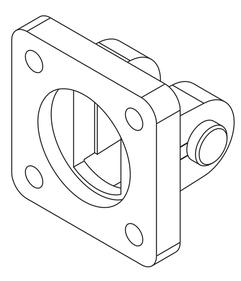

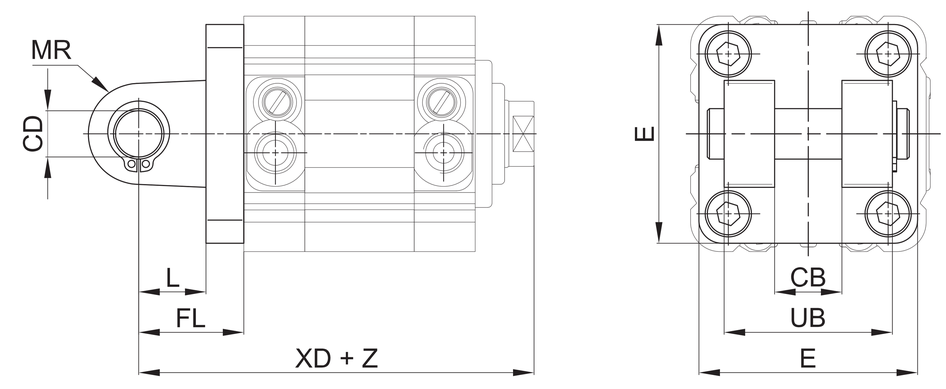


**Material:** Aluminium, zinc-plated steel pin

Z = Stroke

| Cylinder Ø | CB | CD | E | FL | L | MR | UB | XD | | Mass | Part no. |
|---|---|---|---|---|---|---|---|---|---|---|---|
| | H14 | H9 | | ± 0,2 | min. | Max | h14 | | | g | |
| 32 | 14 | 10 | 45 | 22 | 13 | 10 | 34 | 73 | ±1,25 | 68 | KF-10032AS |
| 40 | 16 | 12 | 52 | 25 | 16 | 12 | 40 | 77 | ±1,25 | 112 | KF-10040AS |
| 50 | 21 | 16 | 65 | 27 | 16 | 14 | 45 | 80 | ±1,25 | 196 | KF-10050AS |
| 63 | 21 | 16 | 75 | 32 | 21 | 18 | 51 | 90 | ±1,6 | 288 | KF-10063AS |
| 80 | 25 | 20 | 95 | 36 | 22 | 20 | 65 | 100 | ±1,6 | 566 | KF-10080AS |
| 100 | 25 | 20 | 115 | 41 | 27 | 22 | 75 | 118 | ±1,6 | 818 | KF-10100AS |

## Rear male hinge (ISO MP4)

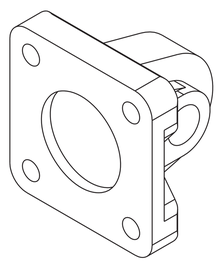

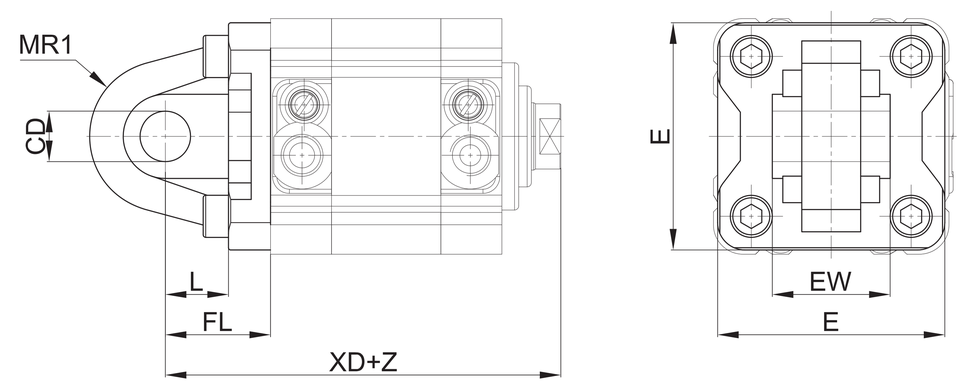


**Material:** Aluminium

Z = Stroke

| Ø | CD | E | EW | | FL | L | MR1 | XD | | Mass | Part no. |
|---|---|---|---|---|---|---|---|---|---|---|---|
| | h9 | | Nom. | Toll. | ±0,2 | min. | | | | g | |
| 32 | 10 | 48 | 26 | -0,2 / -0,6 | 22 | 12 | 15* | 80 | ±1,25 | 80 | KF-11032 |
| 40 | 12 | 54 | 28 | -0,2 / -0,6 | 25 | 15 | 18* | 84 | ±1,25 | 100 | KF-11040 |
| 50 | 12 | 65 | 32 | -0,2 / -0,6 | 27 | 15 | 20* | 90 | ±1,25 | 170 | KF-11050 |
| 63 | 16 | 75 | 40 | -0,2 / -0,6 | 32 | 20 | 23* | 100 | ±1,6 | 250 | KF-11063 |
| 80 | 16 | 95 | 50 | -0,2 / -0,6 | 36 | 20 | 27* | 103 | ±1,6 | 420 | KF-11080 |
| 100 | 20 | 115 | 60 | -0,2 / -0,6 | 41 | 25 | 29,5* | 118 | ±2 | 660 | KF-11100 |

* = Non-standard dimension

GRANZOW®

## Articulated rear male hinge (ISO MP4)

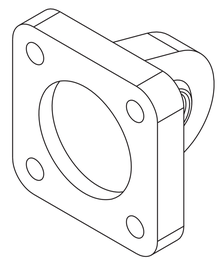

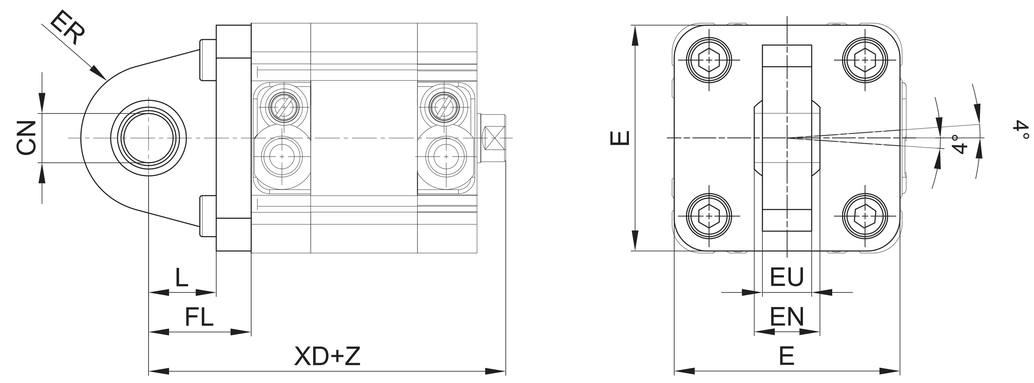


**Material:** Aluminium

Z = Stroke

| Cylinder Ø | E | CN | ER | XD | L | EU | FL | EN | Mass | Part no. |
|---|---|---|---|---|---|---|---|---|---|---|
| | | H9 | | | | | | | g | |
| **32** | 48 | 10 | 15 | 80 | 14 | 10,5 | 22 | 14 | 100 | **KF-11032S** |
| **40** | 54 | 12 | 18 | 84 | 16,5 | 12 | 25 | 16 | 200 | **KF-11040S** |
| **50** | 65 | 12 | 20 | 90 | 17,5 | 12 | 27 | 16 | 300 | **KF-11050S** |
| **63** | 75 | 16 | 21 | 99 | 21,5 | 15 | 32 | 21 | 350 | **KF-11063S** |
| **80** | 95 | 16 | 27 | 106 | 24 | 15 | 36 | 21 | 1600 | **KF-11080S** |
| **100** | 115 | 20 | 29,5 | 124 | 28 | 18 | 41 | 25 | 700 | **KF-11100S** |

## Front/rear flange

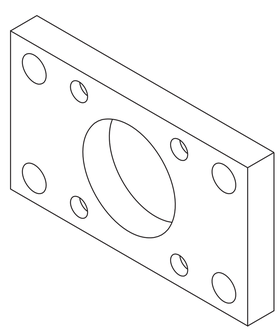

**> Front assembly**

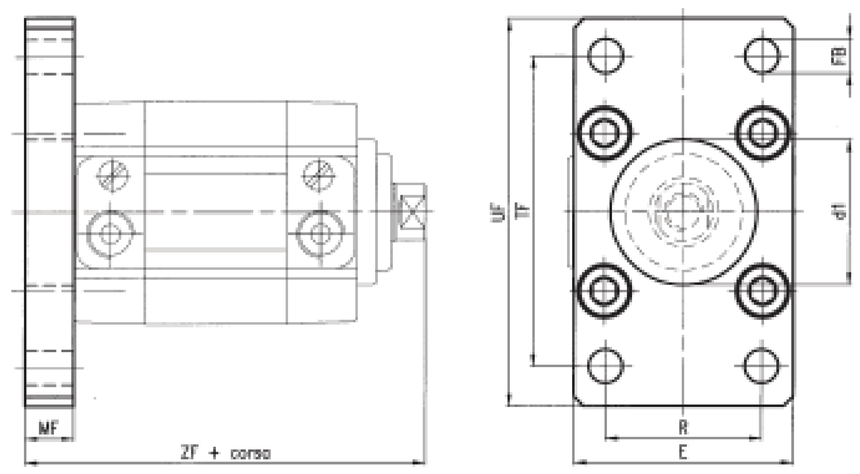


**> Rear assembly**

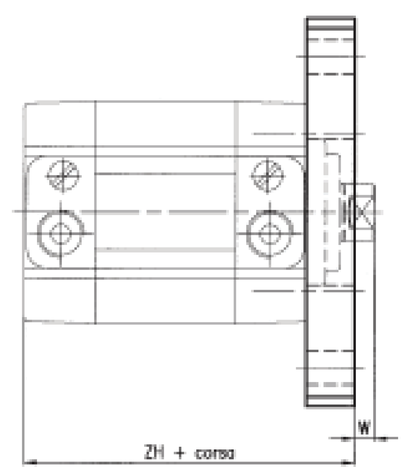


**Material:** Zinc-plated steel

Z = Stroke

| Cylinder Ø | E | FB | W | MF | R | TF | UF | ZF | | ZH | | Mass | Part no. |
|---|---|---|---|---|---|---|---|---|---|---|---|---|---|
| | | H13 | | ± 0,2 | JS14 | JS14 | Max | | | | | g | |
| **32** | 45 | 7 | 4 | 10 | 32 | 64 | 80 | 68 | ±1,25 | 54 | ±1,25 | 200 | **KF-12032** |
| **40** | 52 | 9 | 4 | 10 | 36 | 72 | 90 | 69 | ±1,25 | 55 | ±1,25 | 250 | **KF-12040** |
| **50** | 65 | 9 | 6 | 12 | 45 | 90 | 110 | 75 | ±1,25 | 57 | ±1,25 | 500 | **KF-12050** |
| **63** | 75 | 9 | 6 | 12 | 50 | 100 | 120 | 80 | ±1,6 | 62 | ±1,6 | 650 | **KF-12063** |
| **80** | 95 | 12 | 16 | 16 | 63 | 126 | 150 | 102 | ±1,6 | 70 | ±1,6 | 1500 | **KF-12080** |
| **100** | 115 | 14 | 16 | 16 | 75 | 150 | 170 | 115 | ±1,6 | 83 | ±1,6 | 2200 | **KF-12100** |

**VDMA standard upon request**

## Angle bracket

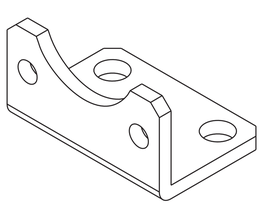

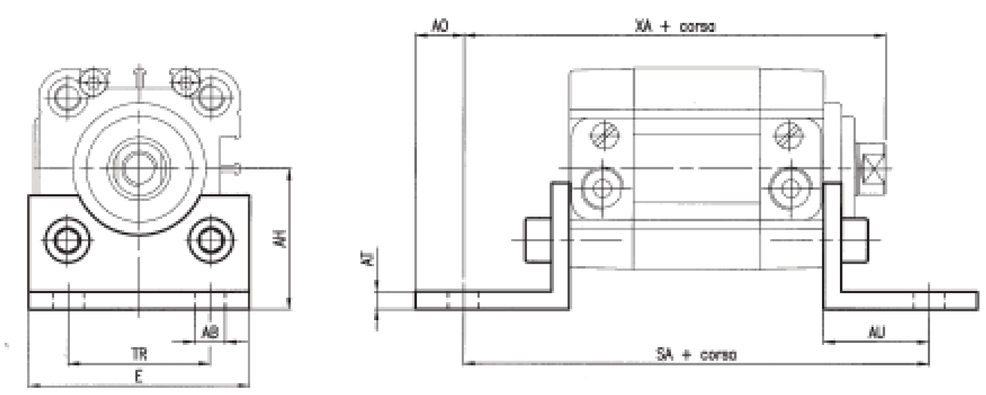


**Material:** Zinc-plated steel

Z = Stroke

| Cylinder Ø | ØAB | AH | AO | AT | AU | E | SA | | TR | XA | | Mass | Part no. |
|---|---|---|---|---|---|---|---|---|---|---|---|---|---|
| | H13 | JS15 | | | ±0,2 | | Norm. | Toll. | JS14 | | | g | |
| **32** | 7 | 32 | 6 | 4 | 24 | 45 | 92 | ±1,25 | 32 | 82 | ±1,25 | 55 | **KF-13032** |
| **40** | 9 * | 36 | 8 | 4 | 28 | 52 | 101 | ±1,25 | 36 | 87 | ±1,25 | 80 | **KF-13040** |
| **50** | 9 * | 45 | 10 | 5 | 32 | 64 | 109 | ±1,25 | 45 | 95 | ±1,25 | 146 | **KF-13050** |
| **63** | 9 * | 50 | 12 | 5 | 32 | 74 | 114 | ±1,6 | 50 | 100 | ±1,6 | 175 | **KF-13063** |
| **80** | 12 | 63 | 15 | 6 | 41 | 94 | 136 | ±1,6 | 63 | 127 | ±1,6 | 390 | **KF-13080** |
| **100** | 14* | 71 | 20 | 6 | 41 | 114 | 149 | ±1,6 | 75 | 140 | ±1,6 | 525 | **KF-13100** |

* = Non-standard dimension

GRANZOW®

## ISO intermediate hinge

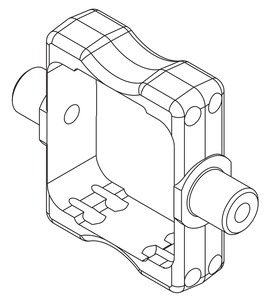

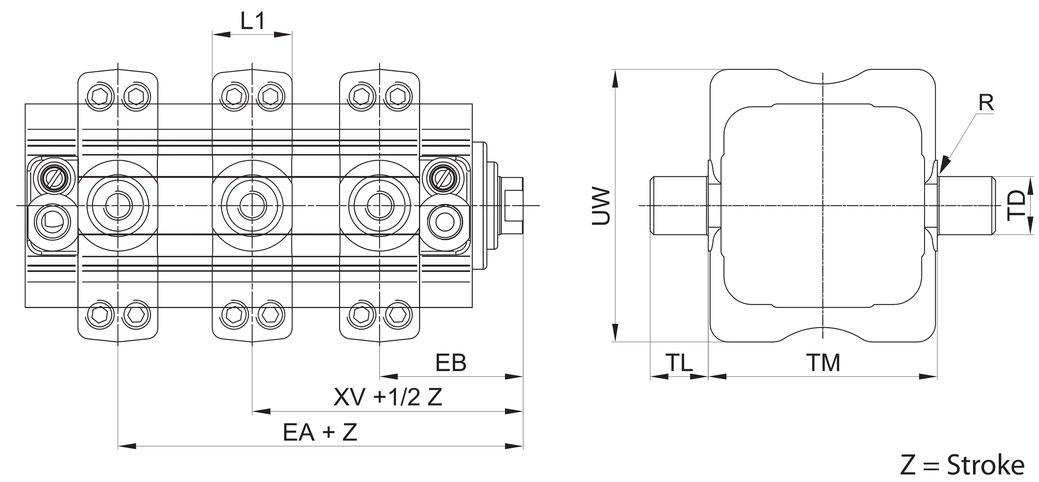


**Material:** Zinc-plated steel

Z = Stroke

| Cylinder Ø | EA | EB | L1 | R | TD | TL | TM | UW | XV | | Mass | Part no. |
|---|---|---|---|---|---|---|---|---|---|---|---|---|
| | Max | min. | | | e9 | h14 | h14 | | | | g | |
| **32** | 31 | 41 | 22 | 0,5 | 12 | 12 | 50 | 65 | 36 | ±2 | 120 | **KDF-14032** |
| **40** | 32 | 41 | 22 | 0,5 | 16 | 16 | 63 | 75 | 36,5 | ±2 | 240 | **RPF-14040** |
| **50** | 36 | 45 | 22 | 1 | 16 | 16 | 75 | 95 | 40,5 | ±2 | 320 | **RPF-14050** |
| **63** | 37 | 48 | 28 | 1 | 20 | 20 | 90 | 105 | 43 | ±2 | 470 | **RPF-14063** |
| **80** | 56,5 | 62,5 | 27,5 | 1 | 20 | 20 | 110 | 130 | 59 | ±2 | 800 | **KDF-14080** |
| **100** | 61 | 70 | 33 | 1 | 25 | 25 | 132 | 145 | 65,5 | ±2 | 1500 | **KDF-14100** |

The dimension **XV + 1/2** indicates the position of the hinge between the end-caps of the cylinder

## Front/rear hinge with floating pin

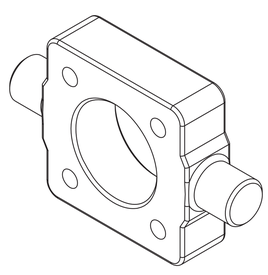

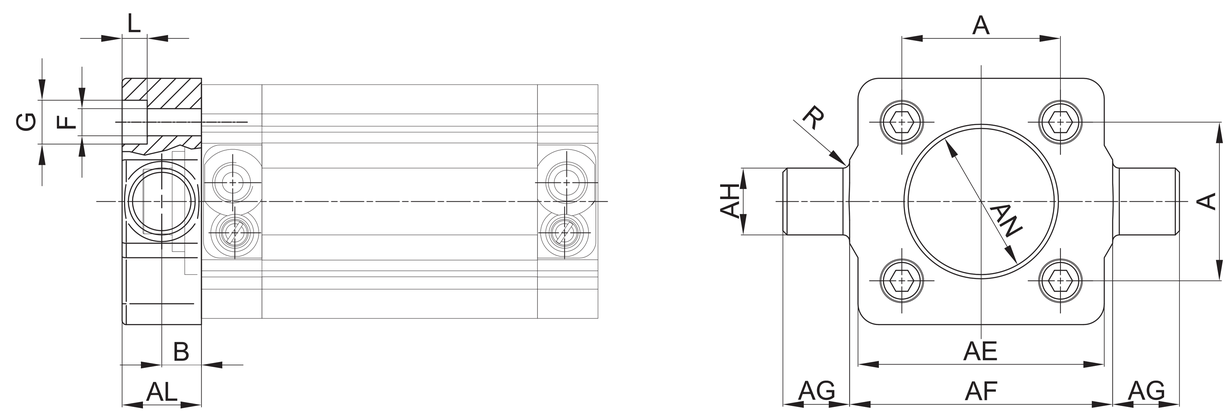


**Material:** Zinc-plated steel

| Cylinder Ø | AE | AL | AH | AG | AF | AN | A | B | F | G | L | R | Mass | Part no. |
|---|---|---|---|---|---|---|---|---|---|---|---|---|---|---|
| | Max | Max | e9 | h14 | h14 | h11 | ±0,2 | ±0,2 / 0 | h13 | h13 | ±0,5 / 0 | 0 / ±0,3 | g | |
| **32** | 46 | 14 | 12 | 12 | 50 | 30 | 32,5 | 6,5 | 6,5 | - | 6 | 1 | 137 | KF-14032AP |
| **40** | 59 | 19 | 16 | 16 | 63 | 35 | 38 | 9 | 6,5 | 10,5 | 6 | 1,6 | 385 | KF-14040AP |
| **50** | 69 | 19 | 16 | 16 | 75 | 40 | 46,5 | 9 | 8,5 | 13,5 | 8 | 1,6 | 513 | KF-14050AP |
| **63** | 84 | 24 | 20 | 20 | 90 | 45 | 56,5 | 11,5 | 8,5 | 13,5 | 8 | 1,6 | 1041 | KF-14063AP |
| **80** | 102 | 24 | 20 | 20 | 110 | 45 | 72 | 11,5 | 10,5 | 16,5 | 10 | 1,6 | 1567 | KF14080AP |
| **100** | 125 | 29 | 25 | 25 | 132 | 55 | 89 | 14 | 10,5 | 16,5 | 10 | 2 | 3000 | KF-14100AP |

## Counter hinge 90°

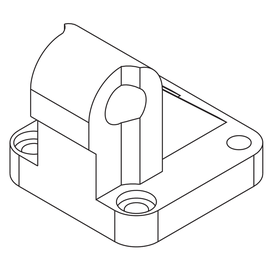

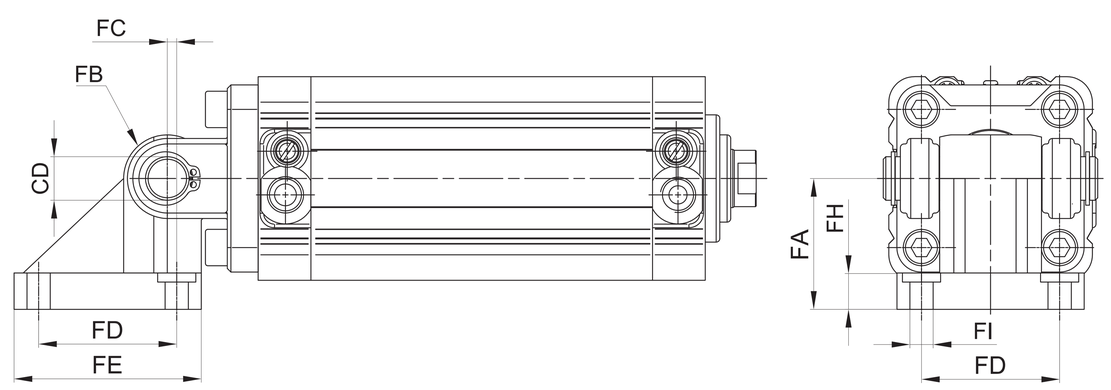


**Material:** Aluminium

| Cylinder Ø | CD | FA | FB | FC | FD | FE | FG | | FH | FI | F1 | F2 | Mass | Part no. |
|---|---|---|---|---|---|---|---|---|---|---|---|---|---|---|
| | H9 | | | | | | | | | | | | g | |
| **32** | 10 | 32 | 10 | 1,2 | 32,5 | 46,5 | 26 | -0,2 / -0,6 | 9 | 6,5 | 5,5 | 10,5 | 90 | **KF-19032** |
| **40** | 12 | 36 | 12 | 2,6 | 38 | 51,5 | 28 | -0,2 / -0,6 | 9 | 6,5 | 5,5 | 10,5 | 120 | **KF-19040** |
| **50** | 12 | 45 | 12 | 0,3 | 46,5 | 63,5 | 32 | -0,2 / -0,6 | 9 | 8,5 | 5 | 13,5 | 200 | **KF-19050** |
| **63** | 16 | 50 | 16 | 3,3 | 56,5 | 73,5 | 40 | -0,2 / -0,6 | 10,5 | 8,5 | 5 | 13,5 | 320 | **KF-19063** |
| **80** | 16 | 63 | 16 | 1,0 | 72 | 93 | 50 | -0,2 / -0,6 | 12 | 10,5 | 4,5 | 16,5 | 580 | **KF-19080** |
| **100** | 20 | 73 | 20 | 2,5 | 89 | 113 | 60 | -0,2 / -0,6 | 13 | 10,5 | 4,5 | 16,5 | 910 | **KF-19100** |

GRANZOW®

## Counter hinge 90° (CETOP)

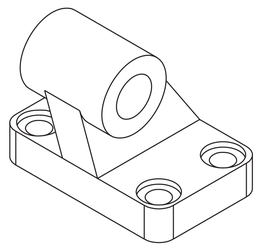

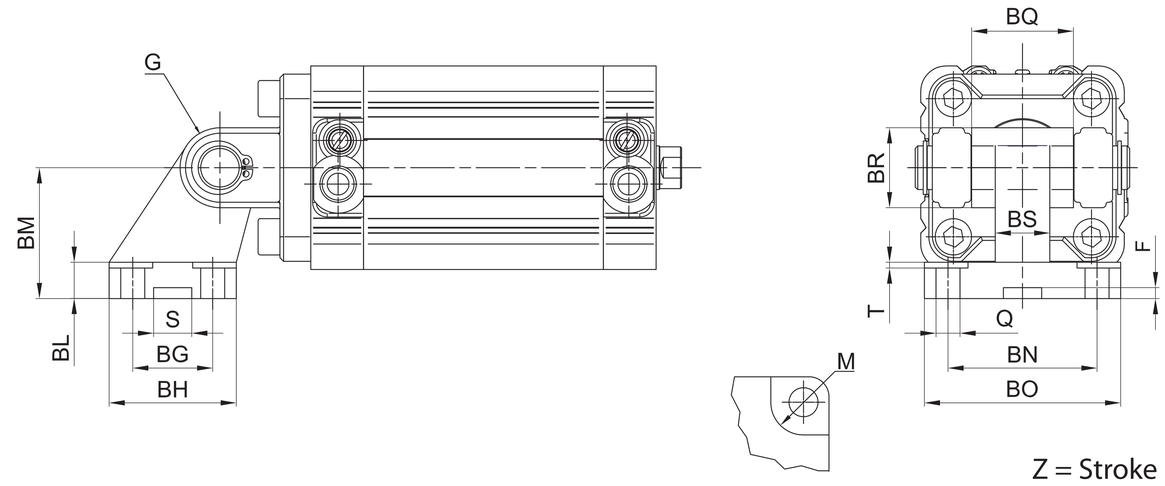


**Material:** Aluminium

Z = Stroke

| Cylinder Ø | Q | M | BG | BH | BI | BL | BM | BN | BO | BS | BR | T | G | S | F | BQ | | Mass | Part no. |
|---|---|---|---|---|---|---|---|---|---|---|---|---|---|---|---|---|---|---|---|
| | H13 | H13 | JS14 | Max | JS14 | | Max | Max | Max | Max | Max | Max | H9 | +0,5/0 | +0,5/0 | | | g | |
| 32 | 6,6 | 11 | 18 | 31 | 21 | 8 | 32 | 38 | 51 | 10 | 20 | 1,6 | 10 | 10,5 | 3 | 26 | | 56 | KF-19032CTA |
| 40 | 6,6 | 11 | 22 | 35 | 24 | 10 | 36 | 41 | 54 | 15 | 22 | 1,6 | 12 | 10,5 | 3 | 28 | | 139 | KF-19040CTA |
| 50 | 9 | 15 | 30 | 45 | 33 | 12 | 45 | 50 | 65 | 16 | 26 | 1,6 | 12 | 10,5 | 3 | 32 | -0,2 | 142 | KF-19050CTA |
| 63 | 9 | 15 | 35 | 50 | 37 | 14 | 50 | 52 | 67 | 16 | 30 | 1,6 | 16 | 10,5 | 3 | 40 | -0,6 | 200 | KF-19063CTA |
| 80 | 11 | 18 | 40 | 60 | 47 | 14 | 63 | 66 | 86 | 20 | 30 | 2,5 | 16 | 10,5 | 3 | 50 | | 321 | KF-19080CTA |
| 100 | 11 | 18 | 50 | 70 | 55 | 17 | 71 | 76 | 96 | 20 | 38 | 2,5 | 20 | 10,5 | 3 | 60 | | 656 | KT-19100CTA |

## Counter hinge 90° (CNOMO)

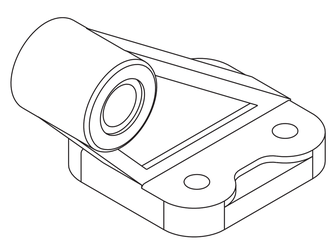

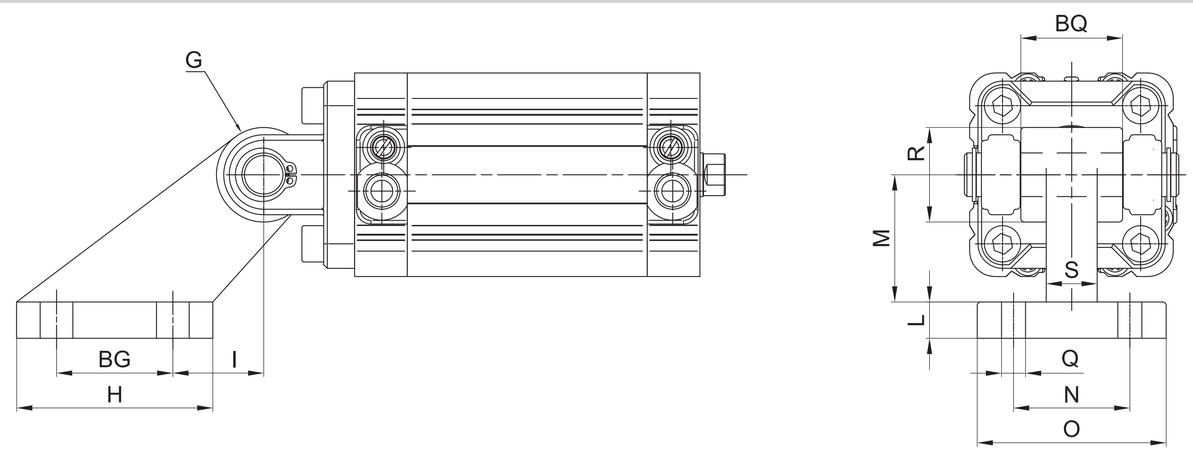


**Material:** Aluminium

Z = Stroke

| Cylinder Ø | Q | BG | H | I | L | M | N | O | S | R | BQ | G | Mass | Part no. |
|---|---|---|---|---|---|---|---|---|---|---|---|---|---|---|
| | H13 | ±0,2 | | ±0,2 | | ±0,2 | ±0,2 | | | Max | ±0,2/ ±0,1 | H9 | g | |
| 32 | 7 | 20 | 37 | 18 | 8 | 32 | 25 | 41 | 9 | 19,5 | 25 | 8 | 58 | KF-19032CN |
| 40 - 50 | 9 | 32 | 54 | 25 | 10 | 45 | 32 | 52 | 14 | 26 | 32 | 12 | 144 | KF-19040050CN |
| 63 - 80 | 11 | 50 | 75 | 32 | 13 | 63 | 40 | 63 | 14 | 32 | 46 | 16 | 300 | KF-19063080CN |
| 100 | 14 | 70 | 103 | 40 | 17 | 90 | 50 | 80 | 22 | 42 | 56 | 20 | 694 | KF-19100125CN |

## Articulated counter hinge

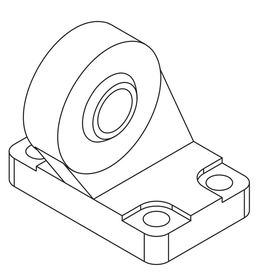

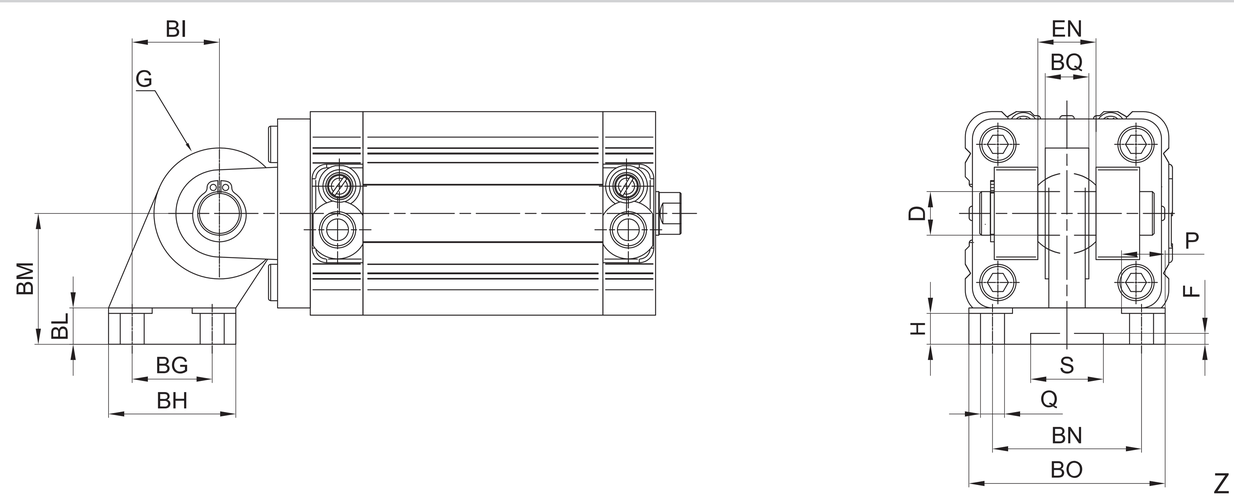


**Material:** Aluminium

Z = Stroke

| Cylinder Ø | Q | P | BG | BH | BI | BL | BM | BN | BO | EN | ER | BQ | D | H | S | F | Mass | Part no. |
|---|---|---|---|---|---|---|---|---|---|---|---|---|---|---|---|---|---|---|
| | H13 | H13 | JS14 | Max | | | | | | | | | | | | | g | |
| 32 | 6,6 | 11 | 18 | 31 | 21 | 10 | 32 | 38 | 51 | 14 | 15 | 10,5 | 10 | 8,5 | 20 | 3 | 178 | KF-19032SC |
| 40 | 6,6 | 11 | 22 | 35 | 24 | 10 | 36 | 41 | 54 | 16 | 18 | 12 | 12 | 8,5 | 20 | 3 | 268 | KF-19040SC |
| 50 | 9 | 15 | 30 | 45 | 33 | 12 | 45 | 50 | 65 | 21 | 20 | 15 | 16 | 10,5 | 20 | 3 | 458 | KF-19050SC |
| 63 | 9 | 15 | 35 | 50 | 37 | 12 | 50 | 52 | 67 | 21 | 23 | 15 | 16 | 10,5 | 20 | 3 | 550 | KF-19063SC |
| 80 | 11 | 18 | 40 | 60 | 47 | 14 | 63 | 66 | 86 | 25 | 27 | 18 | 20 | 11,5 | 20 | 3 | 970 | KF-19080SC |
| 100 | 11 | 18 | 50 | 70 | 55 | 15 | 71 | 76 | 96 | 25 | 30 | 18 | 20 | 12,5 | 20 | 3 | 1326 | KF-19100SC |

GRANZOW®

## Hinge support

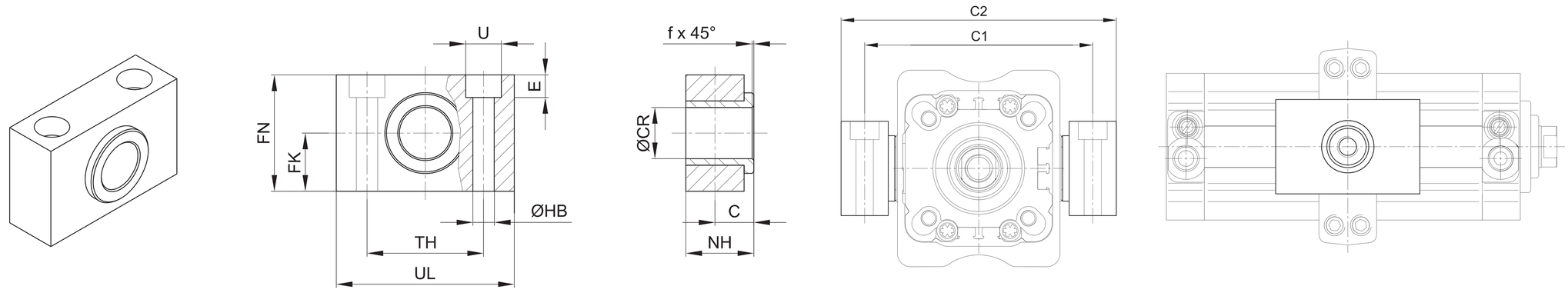


**Material:** Anodized aluminium and brass bushing

Z = Stroke

| Ø | C | CR | FK | FN | HB | NH | TH | UL | U | E | F | C1 | | C2 | | Mass | Part no. |
|---|---|---|---|---|---|---|---|---|---|---|---|---|---|---|---|---|---|
| | | F7 | ± 0,1 | | | | ± 0,1 | | | ± 0,5 | | | | | | g | |
| 32 | 10,2 | 12 | 15 | 30 | 6,6 | 18 | 32 | 46 | 11 | 7 | 1 | 71 | | 86 | | 110 | KF-41032 |
| | | | | | | | | | | | | Ø40 | Ø50 | Ø40 | Ø50 | | |
| 40-50 | 12 | 16 | 18 | 36 | 9 | 21 | 36 | 55 | 15 | 9 | 1,6 | 87 | 99 | 105 | 117 | 200 | KF-41040050 |
| | | | | | | | | | | | | Ø63 | Ø80 | Ø63 | Ø80 | | |
| 63-80 | 13 | 20 | 20 | 40 | 11 | 23 | 42 | 65 | 18 | 11 | 1,6 | 116 | 136 | 136 | 156 | 267 | KF-41063080 |
| | | | | | | | | | | | | Ø100 | Ø125 | Ø100 | Ø125 | | |
| 100-125 | 16 | 25 | 25 | 50 | 14 | 28,5 | 50 | 75 | 20 | 13 | 2 | 164 | 192 | 189 | 217 | 485 | KF-41100125 |

## Centering adaptor ring

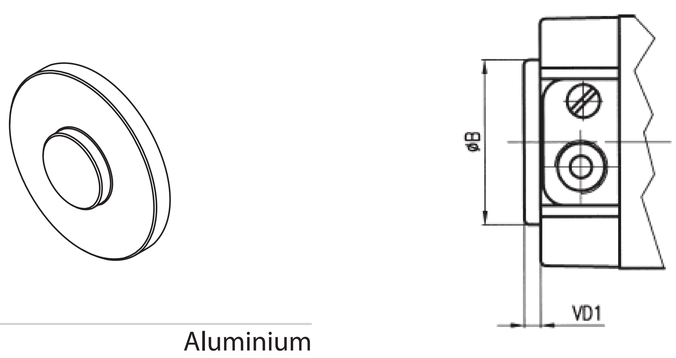


**Material:** Aluminium

| Cylinder Ø | B Ø | VD1 | Part no. |
|---|---|---|---|
| 32 | 30 | 3 | RSF-09032 |
| 40 | 35 | 3 | RSF-09040 |
| 50 | 40 | 3 | RSF-09050 |
| 63 | 45 | 3 | RSF-09063 |
| 80 | 45 | 4 | RSF-09080 |
| 100 | 55 | 5 | RSF-09100 |

## Pin with 2 circlips

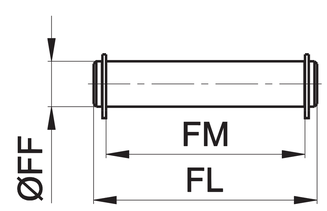


| Cylinder Ø | FF f8 | FL | FM | Mass g | Part no. |
|---|---|---|---|---|---|
| 32 | 10 | 53 | 46 | 30 | KF-18032 |
| 40 | 12 | 61,3 | 53 | 50 | KF-18040 |
| 50 | 12 | 69 | 61 | 50 | KF-18050 |
| 63 | 16 | 80,5 | 71 | 120 | KF-18063 |
| 80 | 16 | 100,5 | 91 | 150 | KF-18080 |
| 100 | 20 | 122,5 | 111 | 290 | KF-18100 |

## Pin for narrow hinge

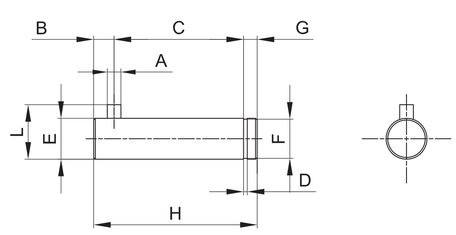


**Material:** Zinc-plated steel

| Ø | A H12 | C +0,5 / +0,3 | D H13 | E F7 | F H11 | G | H | L 0 / -0,5 | B | | Part no. |
|---|---|---|---|---|---|---|---|---|---|---|---|
| 32 | 3 | 32,5 | 1,1 | 10 | 9,6 | 4 | 41 | 14 | 4,5 | | KF-18032S |
| 40 | 4 | 38 | 1,1 | 12 | 11,5 | 4 | 48 | 16 | 6 | | KF-18040S |
| 50 | 4 | 43 | 1,1 | 16 | 15,2 | 5 | 54 | 20 | 6 | 0 | KF-18050S |
| 63 | 4 | 49 | 1,1 | 16 | 15,2 | 5 | 60 | 20 | 6 | -1 | KF-18063S |
| 80 | 4 | 63 | ,13 | 20 | 19 | 6 | 75 | 24 | 6 | | KF-18080S |
| 100 | 4 | 73 | 1,3 | 20 | 19 | 6 | 85 | 24 | 6 | | KF-1/8100S |

### > Fixing screws

Cylindrical screw
UNI 5931 suitable for
mounting elements
Series KF-12.../KF-13...

| Cylinder Ø | Screw | Part no. |
|---|---|---|
| 32 - 40 | M6x20 | AZ4-VN0620 |
| 50 - 63 | M8x25 | AZ4-VN0825 |
| 80 - 100 | M10x30 | AZ4-VN1030 |

Cylindrical screw
UNI 5931 suitable for
mounting elements
Series KF-10.../KF-11

| Cylinder Ø | Screw | Part no. |
|---|---|---|
| 32 - 40 | M6x25 | AZ4-VN0625 |
| 50 - 63 | M8x30 | AZ4-VN0830 |
| 80 - 100 | M10x30 | AZ4-VN1030 |

Cylindrical screw
UNI 5931 and DIN 7984 suitable for
mounting elements
Series KF-19...(Ø32-40-80-100)

| Cylinder Ø | Screw | Part no. |
|---|---|---|
| 32 - 40 | M6x20 [a] | AZ4-VN0620 |
| | M6x25 [b] | AZ4-VN0625 |
| 80 - 100 | M10x30 | AZ4-VN1030 |
| | M10x30 | AZ4-VN1030 |

Cylindrical screw
DIN 7984 suitable for
mounting elements
Series KF-19...(Ø50-63-80-100)

| Cylinder Ø | Screw | Part no. |
|---|---|---|
| 50 - 63 | M8x25 [a] | AZ4-VPA0825 |
| | M8x30 [b] | AZ4-VPA0830 |
| 80 - 100 | M10x30 | AZ4-VN1030 |
| | M10x30 | AZ4-VN1030 |

GRANZOW®

## Female fork with clips

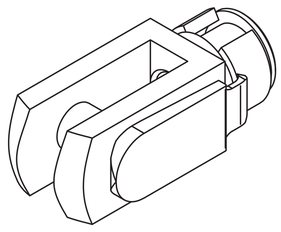

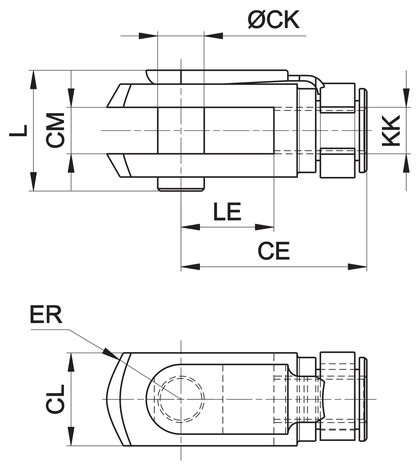


**Material:** Zinc-plated steel

| Cylinder Ø | CE | CK | CL | CM | ER | KK | L | LE | Mass g | Part no. |
|---|---|---|---|---|---|---|---|---|---|---|
| | | | | B12 | | | | | | |
| **32** | 40 | 10 | 20 | 10 | 16 | M10x1,25 | 26 | 20 | 90 | **KF-15032** |
| **40** | 48 | 12 | 24 | 12 | 19 | M12x1,25 | 32 | 24 | 150 | **KF-15040** |
| **50 - 63** | 64 | 16 | 32 | 16 | 25 | M16x1,5 | 40 | 32 | 340 | **KF-15050** |
| **80 - 100** | 80 | 20 | 40 | 20 | 32 | M20x1,5 | 50 | 40 | 670 | **KF-15080** |

Fork with pin suitable for piston rod according to ISO 8140 standard

## Articulated self-lubricating fork

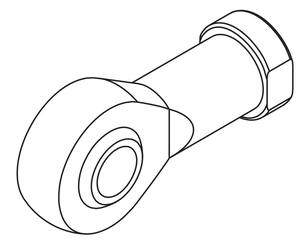

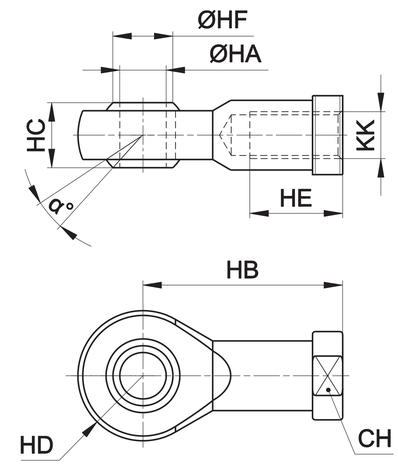


**Material:** Zinc-plated steel

| Cylinder Ø | α° | CH | KK | HA | HB | HC | HD | HE | HF | Mass g | Part no. |
|---|---|---|---|---|---|---|---|---|---|---|---|
| | | | | H7 | | | 0 -0,12 | | | | |
| **32** | 13 | 17 | M10x1,25 | 10 | 43 | 14 | 14 | 20 | 12,9 | 76 | **KF-17032** |
| **40** | 13 | 19 | M12x1,25 | 12 | 50 | 16 | 16 | 22 | 15,4 | 110 | **KF-17040** |
| **50 - 63** | 15 | 22 | M16x1,5 | 16 | 64 | 21 | 21 | 28 | 19,3 | 220 | **KF-17050** |
| **80 - 100** | 14 | 30 | M20 x 1,5 | 20 | 77 | 25 | 25 | 33 | 24,3 | 400 | **KF-17080** |

## Fork with axially mounted articulated pin

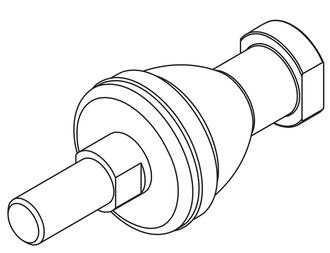

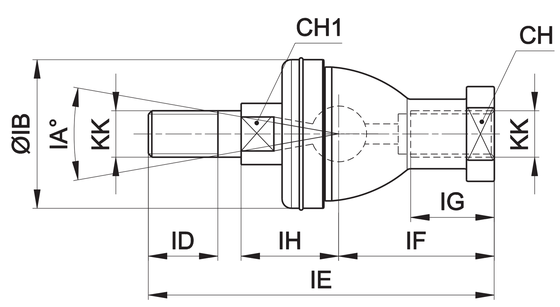


**Material:** Zinc-plated steel

| Cylinder Ø | CH | CH1 | IA° | KK | IH | IB | ID | IE | IF | IG | Mass g | Part no. |
|---|---|---|---|---|---|---|---|---|---|---|---|---|
| | | | | | ±0,3 | | | | | | | |
| **32** | 17 | 11 | 30 | M10x1,25 | 19,5 | 32 | 15 | 74,5 | 35 | 18 | 120 | **KF-22025** |
| **40** | 19 | 17 | 30 | M12x1,25 | 22 | 36 | 17 | 84 | 40 | 20 | 185 | **KF-22040** |
| **50 - 63** | 22 | 19 | 22 | M16x1,5 | 27,5 | 47 | 23 | 112 | 50 | 27 | 360 | **KF-22050** |
| **80 - 100** | 30 | 24 | 15 | M20x1,5 | 31,5 | 58 | 25 | 133 | 63 | 38 | 570 | **KF-22080** |

## Fork with angle mounted articulated pin

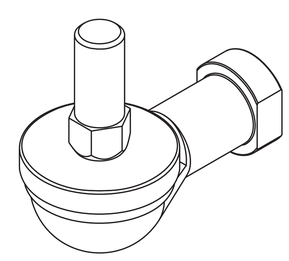

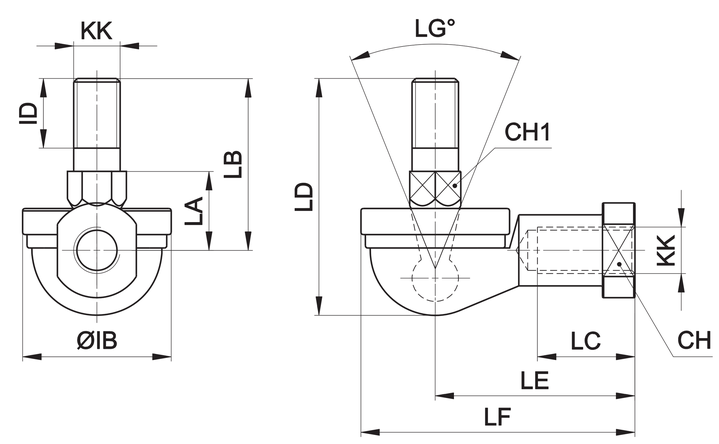


**Material:** Zinc-plated steel

| Cylinder Ø | CH | CH1 | LG° | KK | IB | ID | LA | LB | LC | LD | LE | LF | Mass g | Part no. |
|---|---|---|---|---|---|---|---|---|---|---|---|---|---|---|
| | | | | | | | ±0,3 | | | | | | | |
| **32** | 17 | 11 | 50 | M10x1,25 | 32 | 15 | 17 | 37 | 21 | 50,5 | 43 | 57 | 110 | **KF-23025** |
| **40** | 19 | 17 | 50 | M12x1,25 | 36 | 17 | 19 | 42 | 27 | 57,5 | 50 | 66 | 165 | **KF-23040** |
| **50 - 63** | 22 | 19 | 40 | M16x1,5 | 47 | 23 | 23,5 | 60 | 33 | 79,5 | 64 | 84 | 330 | **KF-23050** |
| **80 - 100** | 30 | 24 | 32 | M20x1,5 | 58 | 25 | 27 | 68 | 40 | 90 | 77 | 99 | 540 | **KF-23080** |

## Floating joint

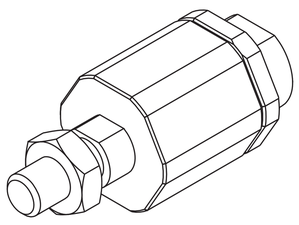

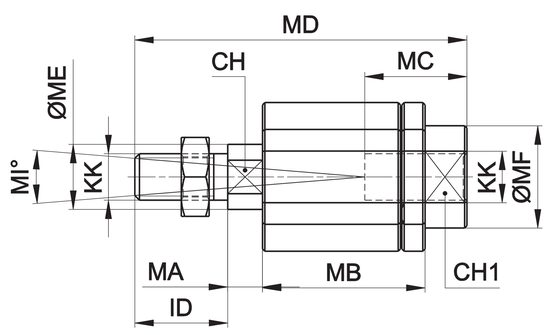


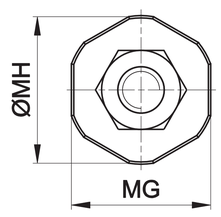


**Material:** Zinc-plated steel

| Cylinder Ø | CH | CH1 | ID | KK | MA | MB | MC | MD | ME | MF | MG | MH | MI° | Mass g | Part no. |
|---|---|---|---|---|---|---|---|---|---|---|---|---|---|---|---|
| **32** | 12 | 19 | 71 | M10x1,25 | 5 | 35 | 20 | 71 | 14 | 22 | 30 | 32 | 8 | 220 | **KF-24032** |
| **40** | 12 | 19 | 75 | M12x1,25 | 5 | 35 | 20 | 75 | 14 | 22 | 30 | 32 | 8 | 230 | **KF-24040** |
| **50 - 63** | 20 | 30 | 103 | M16x1,5 | 8 | 54 | 32 | 103 | 22 | 32 | 41 | 45 | 6 | 660 | **KF-24050** |
| **80 - 100** | 20 | 30 | 119 | M20x1,5 | 8 | 54 | 40 | 119 | 22 | 32 | 41 | 45 | 6 | 700 | **KF-24080** |

## Piston rod locknut (zinc-plated steel)

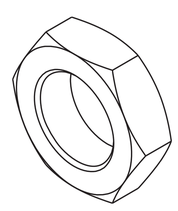

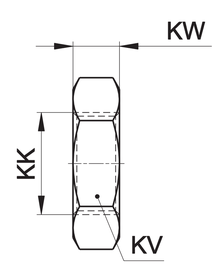


**Material:** Zinc-plated steel

| Cylinder Ø | KK | KV | KW | Mass g | Part no. |
|---|---|---|---|---|---|
| **32** | M10x1,25 | 17 | 6 | 5 | **KF-16032** |
| **40** | M12x1,25 | 19 | 7 | 10 | **KF-16040** |
| **50 - 63** | M16x1,5 | 24 | 8 | 20 | **KF-16050** |
| **80 - 100** | M20x1,5 | 30 | 9 | 30 | **KF-16080** |

## Locking unit

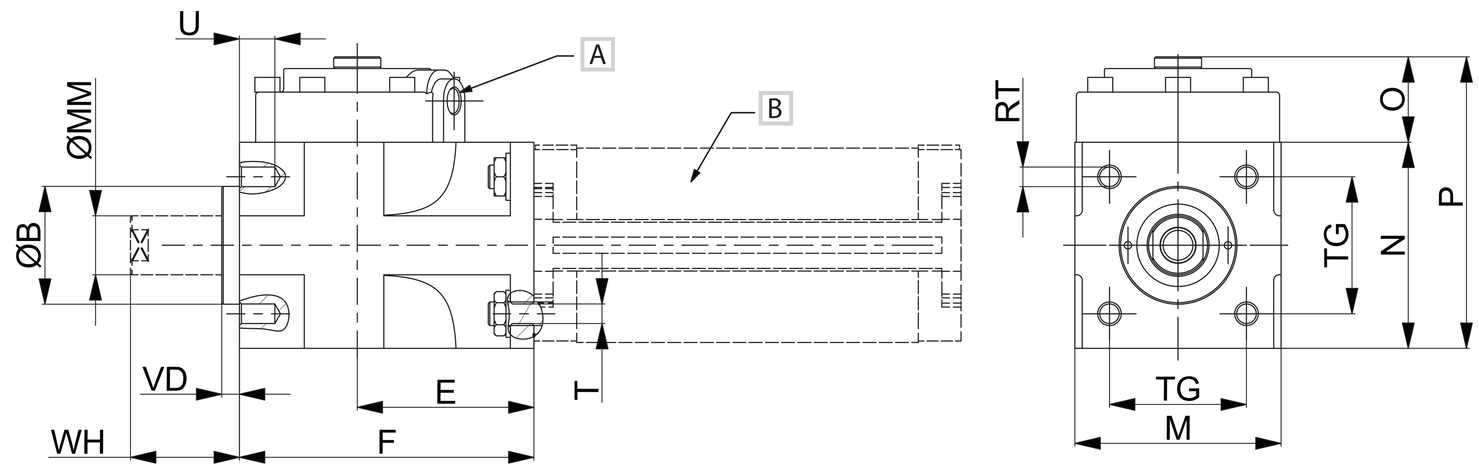


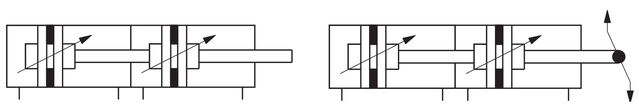

A G1/8 pneumatic release
B STRONG cylinder

| Ø | B | RT | E | F | M | MM | N | O | P | TG | U | T | VD | WH |
|---|---|---|---|---|---|---|---|---|---|---|---|---|---|---|
| **32** | 30 | M6 | 54,5 | 84 | 50 | 12 | 50 | 29,5 | 79,5 | 32,5 | 10 | 6,5 | 6 | 26 |
| **40** | 35 | M6 | 58 | 90 | 58 | 16 | 58 | 29,5 | 87,5 | 38 | 9 | 6,5 | 6 | 30 |
| **50** | 40 | M8 | 60 | 100 | 70 | 20 | 70 | 29 | 99 | 46,5 | 10 | 8,5 | 6 | 37 |
| **63** | 45 | M8 | 65 | 110 | 85 | 20 | 85 | 37 | 122 | 56,5 | 13 | 8,5 | 6 | 37 |
| **80** | 45 | M10 | 75 | 125 | 100 | 25 | 100 | 40,5 | 140,5 | 72 | 16 | 10,5 | 8 | 46 |
| **100** | 55 | M10 | 90 | 152 | 116 | 25 | 116 | 59 | 179 | 89 | 18 | 10,5 | 8 | 51 |

## Flange for female piston rod (standard supplied for RQ series)

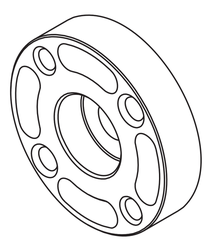

**Material:** Aluminium

| Cylinder Ø | Mass g | Part no. |
|---|---|---|
| **32** | 24 | **RPF-28032** |
| **40** | 35 | **RPF-28040** |
| **50** | 57 | **RPF-28050** |
| **63** | 94 | **RPF-28063** |
| **80 - 100** | - | **-** |

## DF sensor

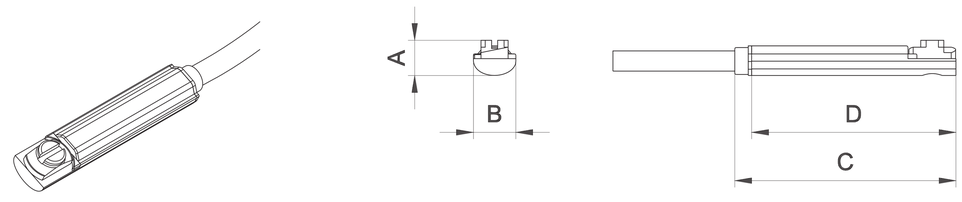


| A | B | C | D | Part no. |
|---|---|---|---|---|
| | | | | |
| 5,2 | 6,3 | 32,7 | 30,2 | **DF-_ _ _** |

## Cable clamping for DF sensor

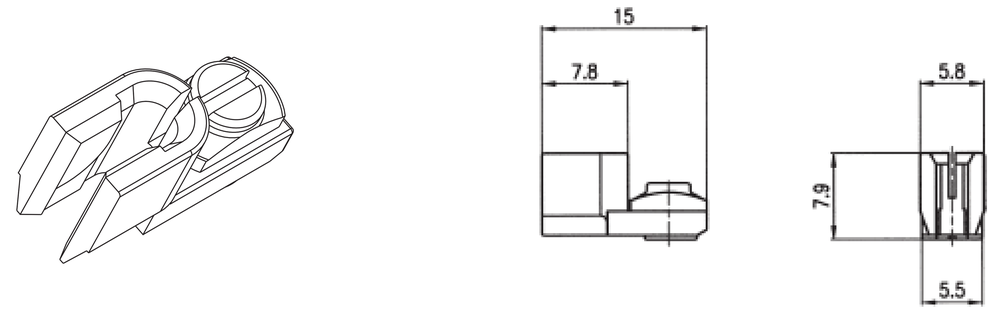


| A | B | C | D | E | Part no. |
|---|---|---|---|---|---|
| | | | | | |
| 15 | 7,8 | 7,9 | 5,8 | 5,5 | **DF-001** |

## DF sensor

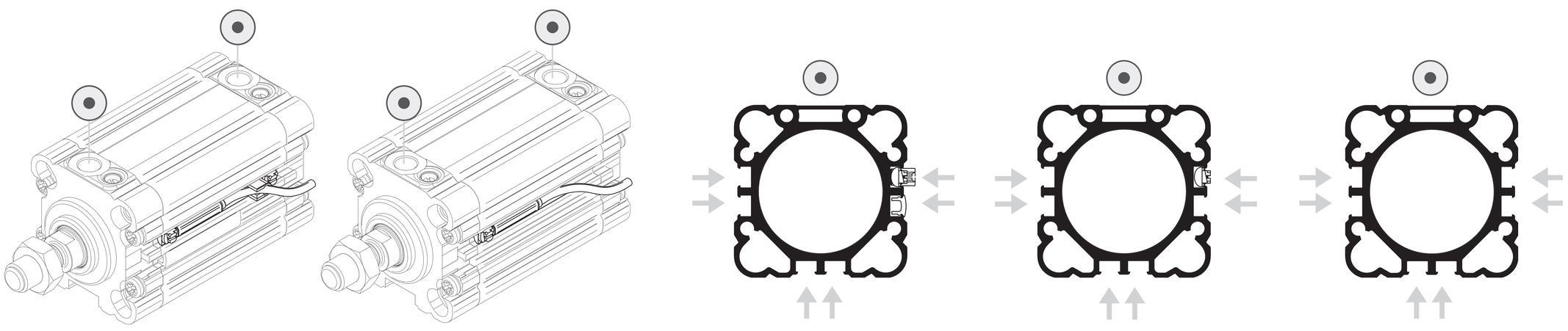

supply port