Mounting Bracket
for 1P, 1N, 1T and 1M Housings and Reflectors

wenglor
the innovative family

ZNNX004
Part Number

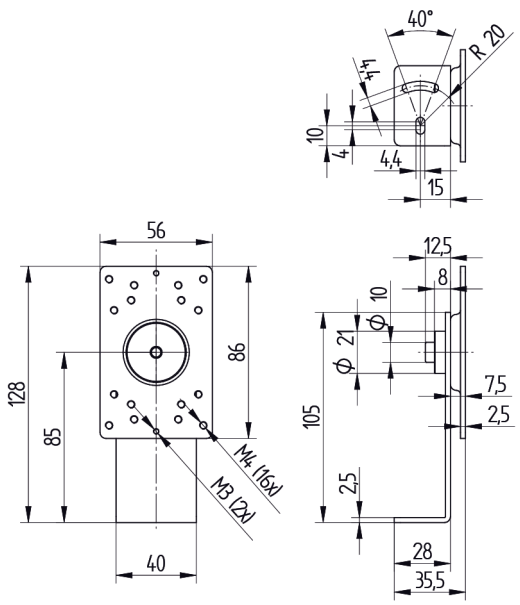

All dimensions in mm (1 mm = 0.03937 Inch)

RoHS

Technical Data

Mechanical Data	
Material	Stainless Steel

- **Highly flexible thanks to 360° setting angle range**
- **Quick sensor installation thanks to threaded holes**
- **Rugged stainless steel design**
- **Universal mounting plate suitable for sensors with 1P, 1N, TA and M housings, as well as reflectors**

The rugged, stainless steel mounting bracket offers all-around full flexibility for installation. Sensors with1P, 1N, TA and M housings, as well as RE6151Bx, Z90R005, ZRME03B01 and RE9538BA reflectors, can be rotated and set in the horizontal plane anywhere within a 360° range. Included threaded holes simplify installation and make it quicker.
1P = 50 × 50 × 20 × 30 mm
1N = 76 × 32.5 ×18 mm
TA = 81 × 55 × 30 mm
M = 49.1 × 57.8 × 27 × 16 mm

Complementary Products

Mounting Set BEF-SET-14 (for 1N and P Housings)
Mounting Set BEF-SET-38 (for TA Housing)
Mounting Set Z1ME001 (for M Housing)
Mounting Set Z1PE004 (for 1P Housing)

Specifications are subject to change without notice V0-02.06.2023