bürkert
FLUID CONTROL SYSTEMS

Direct-acting 2/2-way plunger valve

Type 6027 Compact can be combined with…

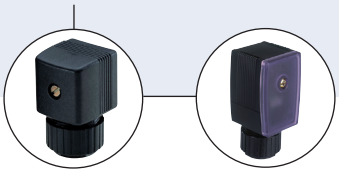

Type 2508
Cable plug

Type 2511
Cable plug

- Direct-acting, powerful valve with diameter of up to DN 12
- Vibration-proof, bolted coil system
- Increased leak-tightness with welded plunger guiding tube
- Explosion proof versions
- Approvals:

Valve 6027 is a direct-acting plunger valve. The stopper and plunger guiding tube are welded together to enhance pressure resistance and leak-tightness. Various seal material combinations are available depending on the application. The coils are moulded with chemically resistant epoxy. 'Kick and Drop' electronics are available for overexcitation (plug 2511) for the reduction of electrical power consumption during operation. An optional sliding ring bearing increases the service life with dry gases. Special seal technology is used for high-pressure applications. In combination with a plug in accordance with DIN EN 17301-803 Form A, the valves satisfy protection class IP65. Stainless steel valves satisfy NEMA 4X.

Circuit function A

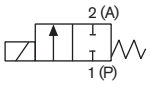

2/2-way valve, NC

Circuit function B

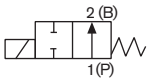

2/2-way valve, NO

Technical data			
Port connection	G 1/4, G 3/8, G 1/2 (RC on request)		
Orifice	DN 1.0 - 12.0		
Body material	Brass or stainless steel 1.4404 (316L)		
Coil material	Epoxy		
Coil insulation class	Epoxy class H		
Seal material	(PTFE/FKM, PTFE/PEEK and EPDM for high temperatures on request)		
Medium Medium resistance according to material combination	Vacuum, neutral gases and liquids (e.g. compressed air, town gas, natural gas, water, hydraulic oil, petrol) and slightly aggressive medium Hot liquids and steam		
Seal material combination and medium temperature			
Seat seal/external seal			
Circuit function Normally Closed (NC)		Circuit function Normally Open (NO)	
FKM/FKM	-10 to +140°C	FKM/FKM	-10 to +100°C
PEEK/FKM	-10 to +80°C	PEEK/FKM	-10 to + 80°C
PTFE/PEEK	-40 to +140°C	PTFE/PEEK	-40 to +100°C
NBR/NBR	-10 to +80°C		
Voltage tolerance	±10%		
Duty cycle / single valve	100% continuous rating		
Electrical connection	acc. to DIN EN 175301-803 Form A for cable plug Type 2508 (see accessories ordering chart)		
Protection class	IP65 with Cable Plug		
Installation	As required, preferably with actuator upright		

Power ratings				
Orifice [mm]	**Power ratings**			
	Inrush AC	**Hold AC (hot coil)**		**DC (hot/cold coil)**
	[VA]	**[VA]**	**[W]**	**[W]**
1.0 -12.0	105	37	16	16 / 21

Response times				
Orifice [mm]	**Response times AC**		**Response times DC**	
	Opening [ms]	**Closing [ms]**	**Opening [ms]**	**Closing [ms]**
1.0 -12.0	10-30	20-30	20-80	20-30

Response times [ms]:
Measured at valve outlet at 6 bar and +20 °C
Opening: pressure build-up 0 to 90%, *closing*: pressure relief 100 to 10%

DTS 1000315170 EN Version: A Status: RL (released | freigegeben | validé) printed: 22.09.2017

Ordering chart for valves, brass

G internal thread

Brass body material, medium pressure up to 30 bar, G internal thread														
Circuit function	Port connection	Orifice	Kv-value water (m^3/h)	Max. medium pressure (bar)						Seal material		Item No.		
				water		oil		air		FKM/FKM Standard	PTFE/PEEK possible option	24V DC	24V 50Hz	230V 50Hz
				DC	AC	DC	AC	DC	AC					
NC	G1/4	3.0	0.28	0-30	0-25	0-30	0-25	0-30	0-25	x	A	178 295	178 296	178 297
		4.0	0.54	0-12	0-16	0-12	0-16	0-12	0-16	x	A	178 299	178 300	178 301
		5.0	0.73	0-6	0-10	0-6	0-10	0-6	0-10	x	A	178 303	178 304	178 305
		6.0	0.95	0-3	0-6	0-3	0-6	0-3	0-6	x	A	178 307	178 308	178 309
	G3/8	3.0	0.28	0-30	0-25	0-30	0-25	0-30	0-25	x	A	178 311	178 312	178 313
		4.0	0.54	0-12	0-16	0-12	0-16	0-12	0-16	x	A	178 315	178 316	178 317
		5.0	0.73	0-6	0-10	0-6	0-10	0-6	0-10	x	A	178 319	178 320	178 321
		6.0	0.95	0-3	0-6	0-3	0-6	0-3	0-6	x	A	178 323	178 324	178 325
		8.0	1.6	0-1	0-3	0-1	0-3	0-1	0-3	x	A	178 327	178 328	178 329
	G1/2	6.0	0.95	0-3	0-6	0-3	0-6	0-3	0-6	x	A	178 331	178 332	178 333
		8.0	1.6	0-1	0-3	0-1	0-3	0-1	0-3	x	A	178 335	178 336	178 337
		10.0	1.8	0-0.4	0-2	0-0.4	0-2	0-0.4	0-2	x	A	178 339	178 340	178 341
NO	G1/4	3.0	0.28	0-16	0-16	0-16	0-16	0-16	0-16	x	A	211 914	228 487	228 488
		4.0	0.54	0-10	0-10	0-10	0-10	0-10	0-10	x	A	208 623	228 489	228 490
		6.0	0.95	0-6	0-6	0-6	0-6	0-6	0-6	x	A	211 915	A	227 530
	G1/2	8.0	1.6	0-3	0-3	0-3	0-3	0-3	0-3	x	A	211 916	228 503	228 504
		10.0	1.8	0-2	0-2	0-2	0-2	0-2	0-2	x	A	210 436	219 530	210 438

NPT internal thread

Brass Body, FKM Seals, complete valve UL-Recognized PU01														
Circuit function	Port connection	Orifice	CV	Max. medium pressure (psi)						Seal material		Item No.		
				water		oil		air		FKM/FKM Standard	PTFE/PEEK possible option	24V DC	120V 60Hz	240V 60Hz
				DC	AC	DC	AC	DC	AC					
NC	NPT1/4	3.0	0.32	0-435	0-406	0-435	0-406	0-435	0-406	x	A	463120	463121	307812
		4.0	0.62	0-174	0-188.5	0-174	0-188.5	0-174	0-188.5	x	A	463122	463123	307813
		6.0	1.09	0-44	0-79.7	0-44	0-79.7	0-44	0-79.7	x	A	463126	463127	307814
	NPT3/8	3.0	0.32	0-435	0-406	0-435	0-406	0-435	0-406	x	A	463128	463129	307815
		4.0	0.62	0-174	0-188.5	0-174	0-188.5	0-174	0-188.5	x	A	463130	463131	307816
		6.0	1.09	0-44	0-79.7	0-44	0-79.7	0-44	0-79.7	x	A	463134	463135	307817
		8.0	1.84	0-15	0-33	0-15	0-33	0-15	0-33	x	A	463136	463137	307818
	NPT1/2	6.0	1.09	0-44	0-87	0-44	0-87	0-44	0-87	x	A	463138	463139	307819
		8.0	2.84	0-15	0-43.5	0-15	0-43.5	0-15	0-43.5	x	A	463140	463141	307820
		10.0	12.08	0-6	0-18.85	0-6	0-18.85	0-6	0-18.85	x	A	463142	463143	307821
Ordering Chart (Normally open), Brass Body, FKM Seals, only coil UL-recognized PU09														
NO	NPT1/4	3.0	0.32	0-232	0-232	0-232	0-232	0-232	0-232	x	A	307758	307790	307832
		4.0	0.62	0-145	0-145	0-145	0-145	0-145	0-145	x	A	307759	307791	307833
		6.0	1.09	0-87	0-87	0-87	0-87	0-87	0-87	x	A	307760	307792	307834
	NPT1/2	8.0	1.84	0-43.5	0-43.5	0-43.5	0-43.5	0-43.5	0-43.5	x	A	307761	307793	307835
		10.0	2.08	0-29	0-29	0-29	0-29	0-29	0-29	x	A	307762	307794	307837

DTS 1000315170 EN Version: A Status: RL (released | freigegeben | validé) printed: 22.09.2017

bürkert

Ordering chart for valves, stainless steel

G internal thread

Stainless steel body material, medium pressure up to 30 bar, G internal thread

Circuit function	Port connection	Orifice	Kv-value water (m³/h)	Max. medium pressure (bar) water DC	water AC	oil DC	oil AC	air DC	air AC	Seal material FKM/FKM Standard	PTFE/PEEK possible option	Item No. 24V DC	24V 50Hz	230V 50Hz
NC	G1/4	3.0	0.28	0-30	0-25	0-30	0-25	0-30	0-25	x	A	178 239	178 240	178 241
		4.0	0.54	0-12	0-16	0-12	0-16	0-12	0-16	x	A	178 243	178 244	178 245
		5.0	0.73	0-6	0-10	0-6	0-10	0-6	0-10	x	A	178 247	178 248	178 249
		6.0	0.95	0-3	0-6	0-3	0-6	0-3	0-6	x	A	178 251	178252	178 253
	G3/8	3.0	0.28	0-30	0-25	0-30	0-25	0-30	0-25	x	A	178 255	178 256	178 257
		4.0	0.54	0-12	0-16	0-12	0-16	0-12	0-16	x	A	178 259	178 260	178 261
		5.0	0.73	0-6	0-10	0-6	0-10	0-6	0-10	x	A	178 263	178 264	178 265
		6.0	0.95	0-3	0-6	0-3	0-6	0-3	0-6	x	A	178 267	178 268	178 269
		8.0	1.6	0-1	0-3	0-1	0-3	0-1	0-3	x	A	178 271	178 272	178 273
	G1/2	6.0	0.95	0-3	0-6	0-3	0-6	0-3	0-6	x	A	178 275	178 276	178 277
		8.0	1.6	0-1	0-3	0-1	0-3	0-1	0-3	x	A	178 279	178 280	178 281
		10.0	1.8	0-0.4	0-2	0-0.4	0-2	0-0.4	0-2	x	A	178 283	178 284	178 285
		12.0	2	0-0.2	0-1.2	0-0.2	0-1.2	0-0.2	0-1.2	x	A	178 287	178 288	178 289
NO	G1/4	3.0	0.28	0-16	0-16	0-16	0-16	0-16	0-16	x	A	230 243	230 244	230 245
		4.0	0.54	0-10	0-10	0-10	0-10	0-10	0-10	x	A	230 246	230 247	230 248
	G3/8	6.0	0.95	0-6	0-6	0-6	0-6	0-6	0-6	x	A	230 255	230 256	230 257
	G1/2	8.0	1.6	0-3	0-3	0-3	0-3	0-3	0-3	x	A	230 261	230 262	230 263
		10.0	1.8	0-2	0-2	0-2	0-2	0-2	0-2	x	A	225 248	230 264	230 265

NPT internal thread

Stainless steel body, FKM seals, complete valve UL-Listed PU02

Circuit function	Port connection	Orifice	CV	Max. medium pressure (psi) water DC	water AC	oil DC	oil AC	air DC	air AC	Seal material FKM/FKM Standard	PTFE/PEEK possible option	Item No. 24V DC	120V 60Hz	240V 60Hz
NC	NPT1/4	3.0	0.32	0-435	0-406	0-435	0-406	0-435	0-406	x	A	463146	463147	307838
		4.0	0.62	0-174	0-188.5	0-174	0-188.5	0-174	0-188.5	x	A	463148	463149	307839
		6.0	1.09	0-44	0-79.7	0-44	0-79.7	0-44	0-79.7	x	A	463152	463153	307840
	NPT3/8	3.0	0.32	0-435	0-406	0-435	0-406	0-435	0-406	x	A	463154	463155	307841
		4.0	0.62	0-174	0-188.5	0-174	0-188.5	0-174	0-188.5	x	A	463156	463157	307842
		6.0	1.09	0-44	0-79.7	0-44	0-79.7	0-44	0-79.7	x	A	463160	463161	307843
		8.0	1.84	0-15	0-33	0-15	0-33	0-15	0-33	x	A	463162	463163	307844
	NPT1/2	6.0	1.09	0-44	0-87	0-44	0-87	0-44	0-87	x	A	307763	307795	307845
		8.0	1.84	0-15	0-43.5	0-15	0-43.5	0-15	0-43.5	x	A	463164	463165	307847
		10.0	2.08	0-6	0-18.85	0-6	0-18.85	0-6	0-18.85	x	A	463166	463167	307848
		12.0	2.31	-	0-14.5	-	0-14.5	-	0-14.5	x	A	-	463169	307849
Ordering Chart (Normally open), Stainless Steel Body, FKM Seals, only coil UL-recognized PU09														
NO	NPT1/4	3.0	0.32	0-232	0-232	0-232	0-232	0-232	0-232	x	A	307775	307807	307862
		4.0	0.62	0-145	0-145	0-145	0-145	0-145	0-145	x	A	307776	307808	307863
		6.0	1.09	0-87	0-87	0-87	0-87	0-87	0-87	x	A	307777	307809	307865
	NPT1/2	8.0	1.84	0-43.5	0-43.5	0-43.5	0-43.5	0-43.5	0-43.5	x	A	307778	307810	307866
		10.0	2.08	0-29	0-29	0-29	0-29	0-29	0-29	x	A	307779	307811	307867

DTS 1000315170 EN Version: A Status: RL (released | freigegeben | validé) printed: 22.09.2017

bürkert

NPT internal thread

Circuit function	Port connection	Orifice	CV	Max. medium pressure (psi) water DC	water AC	oil DC	oil AC	air DC	air AC	Seal material FKM/FKM Standard	PTFE/PEEK possible option	Item No. 24V DC	120V 60Hz	240V 60Hz
Brass Body, FKM Seals, complete valve UL-Listed PU02														
NC	NPT1/4	3.0	0.32	0-435	0-406	0-435	0-406	0-435	0-406	x	A	307 748	307 780	307 822
		4.0	0.62	0-174	0-188.5	0-174	0-188.5	0-174	0-188.5	x	A	307 749	307 781	307 823
		6.0	1.09	0-44	0-79.7	0-44	0-79.7	0-44	0-79.7	x	A	307 750	307 782	307 824
	NPT3/8	3.0	0.32	0-435	0-406	0-435	0-406	0-435	0-406	x	A	307 751	307 783	307 825
		4.0	0.62	0-174	0-188.5	0-174	0-188.5	0-174	0-188.5	x	A	307 752	307 784	307 826
		6.0	1.09	0-44	0-79.7	0-44	0-79.7	0-44	0-79.7	x	A	307 753	307 785	307 827
		8.0	1.84	0-15	0-33	0-15	0-33	0-15	0-33	x	A	307 754	307 786	307 828
	NPT1/2	6.0	1.09	0-44	0-87	0-44	0-87	0-44	0-87	x	A	307 755	307 787	307 829
		8.0	1.84	0-15	0-43.5	0-15	0-435	0-15	0-435	x	A	307 756	307 788	307 830
		10.0	2.08	0-6	0-18.85	0-6	0-18.85	0-6	0-18.85	x	A	307 757	307 789	307 831
Stainless Steel Body, FKM Seals, complete valve UL-Listed PU02														
NC	NPT1/4	3.0	0.32	0-435	0-406	0-435	0-406	0-435	0-406	x	A	307 764	307 796	307 850
		4.0	0.62	0-174	0-188.5	0-174	0-188.5	0-174	0-188.5	x	A	307 765	307 797	307 852
		6.0	1.09	0-44	0-79.7	0-44	0-79.7	0-44	0-79.7	x	A	307 766	307 798	307 853
	NPT3/8	3.0	0.32	0-435	0-406	0-435	0-406	0-435	0-406			307 767	307 799	307 854
		4.0	0.62	0-174	0-188.5	0-174	0-188.5	0-174	0-188.5			307 768	307 800	307 855
		6.0	1.09	0-44	0-79.7	0-44	0-79.7	0-44	0-79.7			307 769	307 801	307 856
		8.0	1.84	0-15	0-33	0-15	0-33	0-15	0-33			307 770	307 802	307 857
	NPT1/2	6.0	1.09	0-44	0-87	0-44	0-87	0-44	0-87	x	A	307 771	307 803	307 858
		8.0	1.84	0-15	0-43.5	0-15	0-43.5	0-15	0-43.5			307 772	307 804	307 859
		10.0	2.08	0-6	0-18.85	0-6	0-18.85	0-6	0-18.85			307 773	307 805	307 860
		12.0	2.31	-	0-14.5	-	0-14.5	-	0-14.5	x	A	-	307 806	307 861

DTS 1000315170 EN Version: A Status: RL (released | freigegeben | validé) printed: 22.09.2017

Ordering chart for valves

Approved models for gas applications DIN EN 161, automatic shut-off valves for gas burners up to 5 bar, valve class A									
Circuit function	Port connection	Orifice	Kv-value water (m^3/h)	Max. medium pressure Gas DC	Max. medium pressure Gas AC	Body material	Seal material NBR Standard	Item No. 24V DC	Item No. 230V 50Hz
NC	G1/4	4.0	0.54	0-5	0-5	Br	x	A	A
	G1/4	5.0	0.73	0-5	0-5	Br	x	A	A
	G1/4	6.0	0.95	0-3	0-5	Br	x	271 196	271 427
	G3/8	8.0	1.6	0-1	0-3	Br	x	271 197	271 428
	G3/8	10.0	1.8	0-0.4	0-2	Br	x	271 198	271 429
	G1/2	12.0	2	0-0.2	0-1.2	St. st.	x	271 199	271 430

Approved models for gas applications DIN 3394-1 actuators for backing up and cleaning as well as regulating pressures of 4 to 16 bar, valve class B, valve group 2									
Circuit function	Port connection	Orifice	Kv-value water (m^3/h)	Max. medium pressure Gas DC	Max. medium pressure Gas AC	Body material	Seal material NBR Standard	Item No. 24V DC	Item No. 230V 50Hz
NC	G1/4	3.0	0.28	0-30	0-25	Br	x	258 288	A
	G1/4	4.0	0.54	0-12	0-16	Br	x	253 500	A
	G1/4	5.0	0.73	0-6	0-10	Br	x	A	A
	G1/4	6.0	0.95	0-3	0-5	Br	x	A	A
	G3/8	8.0	1.6	0-1	0-3	Br	x	A	A
	G3/8	10.0	1.8	0-0.4	0-2	Br	x	A	260 041
	G1/2	12.0	2	0-0.2	0-1.2	St. st.	x	258 289	A

Version up to 16 bar
Circuit function A (NC)

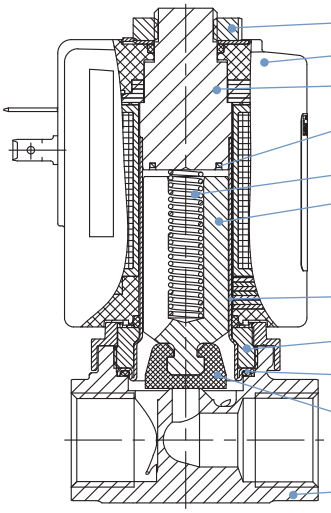

Locknut	DIN 176 thick-film passivated or stainless steel
Coil	Epoxy
Stopper	Stainless steel 1.4113
Shading ring	Copper (brass body), silver (stainless steel body)
Spring	Stainless steel 1.4310
Plunger	Stainless steel 1.4113
Guide tube	Stainless steel 1.4303
Nipple	Brass, stainless steel 1.4305
Seal	NBR
Seat seal	NBR
Housing	Brass, stainless steel 1.4404 /316L

DTS 1000315170 EN Version: A Status: RL (released | freigegeben | validé) printed: 22.09.2017

Ordering chart for valves

Order code MX 30 high pressure version with pendulum seal														
Brass and stainless steel body material, medium pressure up to 135 bar, G internal thread cable plug included in delivery														
Circuit function	Port connection	Orifice	Kv-value water (m^3/h)	max. medium pressure (bar)						Seal material		Item No.		
				water		oil		air		PTFE/FKM Standard		24V DC	24V 50Hz	230V 50Hz
				DC	AC	DC	AC	DC	AC					
Brass body														
NC	G1/4	2.0		0-80	0-75	0-80	0-75	0-80	0-75	x		184 667	A	184 668
Stainless steel body														
NC	G1/4	1.5		0-135	0-135	0-135	0-135	0-135	0-135	x		215 024	215 028	203 855
		2.0		0-100	0-75	0-100	0-75	0-100	0-75	x		271 439	205 407	271 440

Order code MX 31 high pressure version with ball seal													
Stainless steel body material, medium pressure up to 250 bar, G internal thread cable plug included in delivery													
Circuit function	Port connection	Orifice	Kv-value water (m^3/h)	max. medium pressure (bar)						Seal material	Item No.		
				Viscosity 1mm²/s		Viscosity 21mm²/s		Air		PEEK/FKM Standard	24V DC	24V 50-60Hz	230V 50-60 Hz
				DC	AC	DC	AC	DC	AC				
Stainless steel body													
NC	G1/4	1.0		0-250	0-250	0-250	0-250	0-250	0-250	x	265 507	(-)	267 229
						0-200	0-200			x	(-)	267 226	(-)
		1.5		0-150	0-150	0-80	0-80	0-150	0-150	x	267 217	(-)	267 237
						0-70	0-70			x	(-)	267 234	(-)
NO	G1/4	1.0		0-200	0-200	0-150	0-150	0-250	0-250	x	269 823	A	267 239
		1.5		0-100	0-100	0-80	0-80	0-130	0-130	x	269 824	A	271 269

DTS 1000315170 EN Version: A Status: RL (released | freigegeben | validé) printed: 22.09.2017

Order code MX 14 and MX 15 high pressure version with pendulum, only coil UL-recognized PU09

Order chart (normally closed)

Circuit function	Port connection	Orifice	max. medium pressure (bar)						Item No.		
			Water		Oil		Air				
			DC	AC	DC	AC	DC	AC	24V DC	120V/60Hz	240V/60
Brass body material, PTFE/FKM seal material, medium pressure up to 1957 PSI											
NC	NPT1/4	2.0	0-1160	0-1087	0-1160	0-1087	0-1160	0-1087	308856	308857	308859
NO	NPT1/4	2.0	0-435	0-435	0-435	0-435	0-435	0-435	311608	311610	311612
Stainless steel body material, medium pressure up to 1957 PSI											
NC	NPT1/4	1.5	0-1957	0-1957	0-1957	0-1957	0-1957	0-1957	308847	308848	308849
NO	NPT1/4	1.5	0-870	0-870	0-870	0-870	0-870	0-870	311597	311598	311599
NC	NPT1/4	2.0	0-1450	0-1087	0-1450	0-1087	0-1450	0-1087	308851	308852	308854
NO	NPT1/4	2.0	0-435	0-435	0-435	0-435	0-435	0-435	311601	311604	311660

Order code MX 31 and 32 high pressure version with ball seal, only coil UL-recognized PU09

Order chart (normally closed)

Circuit function	Port connection	Orifice	max. medium pressure (bar)						Item No.		
			Viscosity 1mm²/s		Viscosity 21mm²/s		Air				
			DC	AC	DC	AC	DC	AC	24V DC	120V/60Hz	240V/60
Stainless steel body material, PEEK/FKM seal material, medium pressure up to 3625 PSI											
NC	NPT1/4	1.0	0-3625	0-3625	0-3625	0-3625	0-3625	0-3625	308819	-	-
		1.5	0-2175	0-2175	0-1160	0-1160	0-2175	0-2175	308842	-	-
NO	NPT1/4	1.0	0-2900	0-2900	0-2175	0-2175	0-3625	0-3625	311570	-	-
		1.5	0-1450	0-1450	0-1160	0-1160	0-1885	0-1885	311576	-	-

Order code MX 31 and 32 high pressure version with ball seal without approval

Order chart (normally closed)

Circuit function	Port connection	Orifice	max. medium pressure (bar)						Item No.		
			Viscosity 1mm²/s		Viscosity 21mm²/s		Air				
			DC	AC	DC	AC	DC	AC	24V DC	120V/60Hz	240V/60
Stainless steel body material, PEEK/FKM seal material, medium pressure up to 3625 PSI											
NC	NPT1/4	1.0	0-3625	0-3625	0-3625	0-3625	0-3625	0-3625	-	308820	308821
		1.5	0-2175	0-2175	0-1160	0-1160	0-2175	0-2175	-	308845	308846
NO	NPT1/4	1.0	0-2900	0-2900	0-2175	0-2175	0-2900	0-2900	-	311573	311574
		1.5	0-1450	0-1450	0-1160	0-1160	0-1450	0-1450	-	311593	311596

DTS 1000315170 EN Version: A Status: RL (released | freigegeben | validé) printed: 22.09.2017

Materials

Version up to 30 bar
Circuit function A

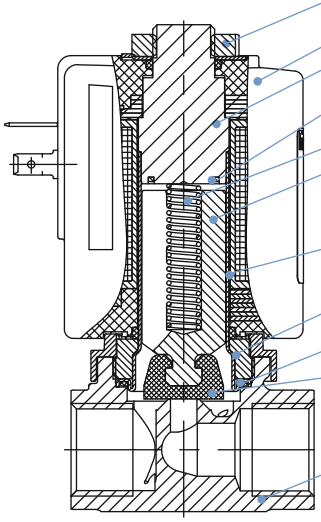

Locknut	DIN 176 thick-film passivated or stainless steel
Coil	Epoxy
Stopper	Stainless steel 1.4113
Shading ring	Copper (brass body), silver (stainless steel body)
Spring	Stainless steel 1.4310
Plunger	Stainless steel 1.4113
Guide tube	Stainless steel 1.4303
Nipple	Brass, stainless steel 1.4305
Seal	FKM, PEEK (EPDM on request)
Seat seal	FKM, PTFE (EPDM on request)
Housing	Brass, stainless steel 1.4404 /316L

Version up to 135 bar
Circuit function A

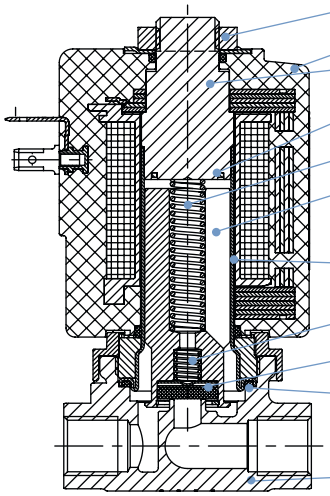

Locknut	DIN 176 thick-film passivated or stainless steel
Coil	Epoxy
Stopper	Stainless steel 1.4113
Shading ring	Silver (stainless steel body)
Spring	Stainless steel 1.4310
Plunger	Stainless steel 1.4113
Guide tube	Stainless steel 1.4303
Spring	1.4310
Seat seal	PTFE pendulum seal
Seal	FKM
Housing	Brass, stainless steel 1.4404 /316L

▪ **High pressure version from 135 bar**
Circuit function A

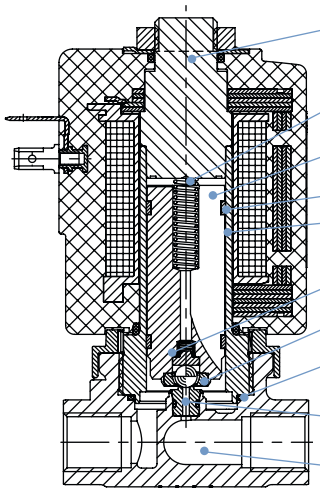

Stopper	1.4523
Compression springs	1.4310
Plunger	Stainless steel 1.4113
Glider	PTFE
Armature guide tube	1.4571
Ball seat	1.4305
Seat seal	Ceramic ball
O-rings	FKM
Seat	PEEK
Housing	Stainless steel 1.4404 (316L) only in ¼" G and NPT

DTS 1000315170 EN Version: A Status: RL (released | freigegeben | validé) printed: 22.09.2017

Dimensions [mm]

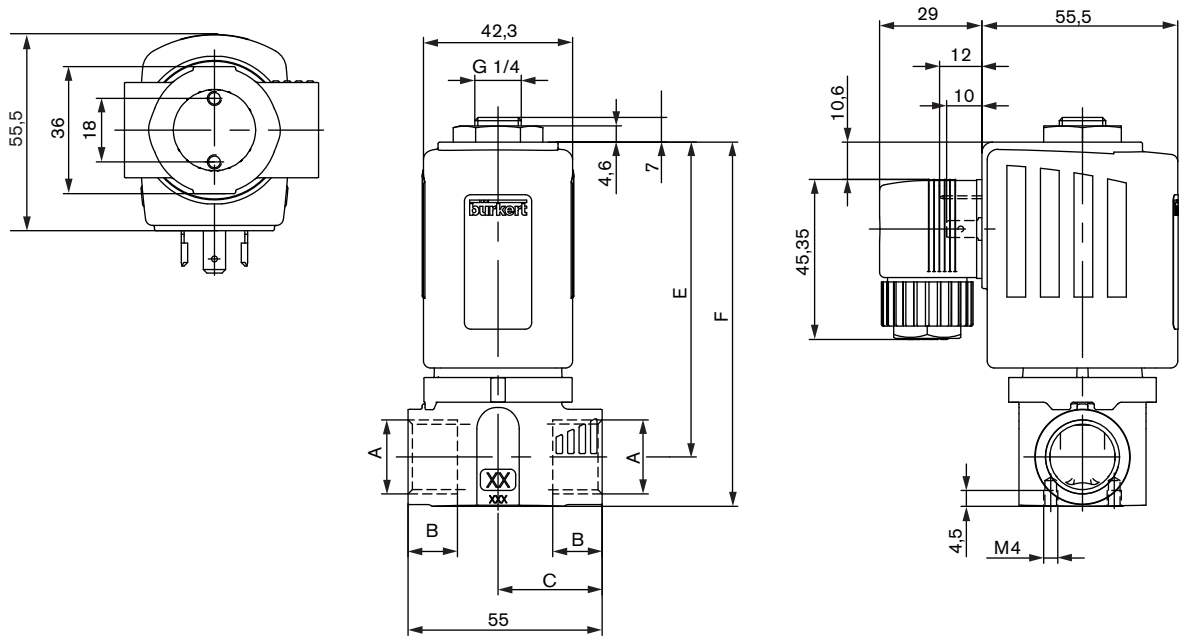

A Port connection	B [mm]	C [mm]	E [mm]	F [mm]	Weight [g]
G 1/4	12	27.5	88.2	98.2	793
G 3/8	12	27.5	89.2	101.2	816
G 1/2	14	29.5	89.2	103.2	840

Ordering chart for accessories

Cable plug Type 2508 according to DIN EN 175301-803 Form A

Circuitry	Voltage/ Frequency	Item No.
without (Standard)	0 - 250 V AC/DC	008 376
with LED	12 - 24 V AC/DC	008 360
with LED and varistor	12 - 24 V AC/DC	008 367
with rectifier, LED and varistor	12 - 24 V AC/DC	008 363
with LED	200 - 240 V	008 362
with LED and varistor	200 - 240 V	008 369
further versions see datasheet Type 2508		

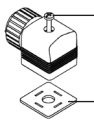

The delivery of a cable plug includes the flat seal and the fixing screw. For other cable plug versions according to DIN EN 175301-803 (previously DIN 43650) Form A, see separate datasheet for Type 2508. When you click on the orange box "More info." below, you will come to our website for the resp. product where you can download the datasheet.

Mehr Infos

To find your nearest Bürkert facility, click on the orange box → www.burkert.com

In case of special application conditions, please consult for advice.

Subject to alterations

1502/14_EU-en_00895015

DTS 1000315170 EN Version: A Status: RL (released | freigegeben | validé) printed: 22.09.2017